GENERAL

G1. These drawings shall be read in conjunction with all Architectural and other Consultants' drawings, Specifications and with such other written instructions as may be issued during the course of the Contract. Any discrepancy shall be referred to the Superintendent for decision before proceeding with the work.

G2. All dimensions are in millimetres. Dimensions shall NOT be obtained by scaling the Structural Drawings. Levels shown on the Structural Drawings are to the top of structural concrete or structural steelwork unless noted otherwise.

G3. Setting out dimensions shown on the drawings shall be verified by the Builder.

G4. During construction the structure shall be maintained in a stable condition and no part shall be overstressed. Temporary bracing shall be provided by the Builder as required.

G5. All workmanship and materials shall be in accordance with the requirements of the SAA and NZS Codes and the By-Laws and ordinances of the relevant building authorities.

G6. Refer to Architectural Drawings for block wall thicknesses where not mentioned on these Drawings and for falls in slabs, extra packings, waterproofing membranes, contraction joint filling materials and all other architectural features such as drip grooves, pour breaks in off-form concrete, fillets and the like.

G7. The structural work shown on these drawings has been designed for the following exposure classification for durability.

ELEMENT	FIRE-RESISTANCE RATING

G8. The structural work shown on these drawings has been designed for the following live loads in accordance with NZS 4203.

FLOOR USAGE	LIVE LOAD (kPa)

NOTE:

A superimposed dead load of 1.0kPa has been allowed for partitions & services.

G9. The structural work shown on these drawings has been designed for the follwing wind load in accordance with AS 1170 Part 2.

Basic Wind Velocity: 57m/s
Terrain Category: Vp = 2.5

G10. The structural work shown on these drawings has been designed for Earthquake loads in accordance with NZ 4203: 1992 with Zone factor Z = 0.9.

FOUNDATION

F1. Footings have been designed for an allowable intensity or bearing pressure of:

ELEMENT	STRATA	BEARING PRESSURE
All	NATURAL CLAY	100 kPa

CONCRETE

C1. All workmanship and materials shall be in accordance with NZS 3109 PART 1 current edition with amendments, except where varied by the Contract Documents.

C2. Concrete Quality:-

ELEMENT	SLUMP	CONCRETE TYPE	MAX. AGG. SIZE	MINIMUM CONCRETE STRENGTH Fc MPa
Footings	80	A	20	25 MPa
Slabs on ground	80	A	20	25 MPa
Columns	80	A	20	30 MPa
Suspended floor	80	A	20	30 MPa

C3. Clear concrete cover to reinforcement shall be as indicated on drawings or the table below (U.N.O)

SLAB SYMBOL

-Denotes slab thickness
-Denotes cover to T & B reinf.
-Denotes slab thickness
-Denotes cover to top reinf.
-Denotes cover to btm reinf.

CONCRETE CONT.

Refer to slab notes for general slab thickness and covers. This symbol applies elsewhere.

ELEMENT	CONCRETE COVER		
	Cast against & exposed to earth	Exposed to earth or weather	Not exposed to weather or earth
a) Pad footings	75	-	-
b) Strip footings	75	-	-
c) Slabs, walls, & nbs 20mm bars or wire and smaller	75	35	20
d) Beams			
Longitudinal reinf.	80	50	40
Ties and stirrups	65	40	25
e) Columns			
Longitudinal reinf	80	50	40
Ties and stirrups	65	40	25

C4. Sizes of concrete elements do not include thickness of applied finishes.

C5. Construction joints where shown on the Structural Drawings shall be well scabbled and painted with epoxy prior to pouring of fresh concrete.

C6. Construction joints where not shown shall be located to the approval of the Engineer.

C7. Beam depths are written first and include slab thickness, if any.

C8. No penetrations, recesses, sleeves, etc other than those shown on the Structural Drawings shall be made in concrete members without the prior approval of the Engineer.

C9. Pipes or conduits shall not be placed within the concrete cover to reinforcement without the approval of the Engineer. The concrete cover to embedded pipes or conduits shall be a minimum of 20 mm.

C10. Provide 20 chamfers to all columns & beams unless varied by achitects drawing.

C11. Provide 20 drip groves to soffits of all external slabs & beams.

REINFORCEMENT

R1. Reinforcement is represented diagrammatically. It is not necessarily shown in true projection.

R2. Splices in the reinforcement shall be made only in the positions shown. The written approval of the Engineer shall be obtained for any other splices. Lap length for deformed bars shall be as tabulated below.

BARS TYPE AND SIZE	VERTICAL BARS	HORIZ BARS WITH MORE THAN 300mm OF CONC BELOW BAR	OTHER LOCATIONS	90 COG LENGTH
D12	500	550	500	200
D16	700	800	700	200
D20	1000	1250	1000	200
D24	1200	1500	1200	250
D28	1400	1750	1400	300
D32	1600	1900	1600	350
D36	1700	2200	1700	450

- Stagger laps as much as practicable. Top steel shall be lapped within central half of the of the beam span & bottom beam bars within 1/4 on either side of support uno.
- For plain bars, lap lengths shall be twice the lengths as shown above.

R3. Welding of reinforcement will not be permitted unless shown on the Structural Drawings.

R4. All reinforcement fabric shall comply with NZS 3402P and shall be supplied as flat sheets.

Typical Fabric Lap:- —||— 25 MIN

R5. Place sufficient bar chairs under bottom reinforcing rods and top crossrods in slabs to allow them to be supported in their correct positions during concreting (not greater than 900 mm centres both ways).

R6. Reinforcement Layers denoted thus:-

REINFORCEMENT CONT.

R7 Bending of reinforement
Bars partially embedded in concrete shall not be site bent, unless noted or shown on the drawings or specifically approved by the ENGINEER

The minmum internal diameter of bend of all bars shall be as follows UNO

STEEL GRADE	MINIMUM DIAMETER OF BEND			
	MAIN REINFORCEMENT		STIRRUPS & TIES	
	BAR DIA	MIN. DIA OF BEND	BAR DIA	MIN. DIA OF BEND
GRADE 300	6	30	6	24
	10	50	10	40
	12	60	12	48
	16	80	16	64
	20	100	20	80
	24	120		
	28	140		
	32	162		
	40	240		

STEELWORK

S1. All workmanship and materials shall be in accordance with AS 4100 and AS 1554 except where varied by the Contract Documents.

S2. Unless otherwise noted, all steel shall be in accordance with -

AS 1204 Grade 250 for Rolled Sections
AS 1163 Grade 250 for R H S. Sections
AS 1163 Grade 200 for C.H.S. Sections
AS 1204 Grade 350 for all high strength steel.

S3. The builder shall prepare workshop drawings and shall submit three copies of each drawing for approval. Fabrication shall NOT commence until approval has been received. Approval does not include dimensions

S4. Unless noted otherwise, all bolts to be 16 diameter commercial grade structural bolts of grade 4.6 snug tight (M16-4.6/S) conforming to AS 1111.
Bolts - designated by the Number, Diameter, Grade and Tightening procedure.
e.g. 4M16-4.6/S means 4 16 dia. commercial grade bolts snug tight.
6M20-8.8TF means 6M20 high strength structural bolts fully tensioned in a friction joint.
6M24-8.8TB means 6M24 high strength structural bolts fully tensioned in a bearing joint. (Some slip allowed.)

All holes shall be drilled and shall be 2mm larger than the bolt diameter U.N.O. Holes in baseplates may be 5mm larger than the bolt diameter U.N.O. All bolts shall have at least one thread projecting through both sides of the nut.

Bolt spacing, edge distances, gauge lines, beam copes etc, to conform to A.I.S.C standardised connections U.N.O.

Remove all sharp edges and burrs.

S5. Unless otherwise noted, all welds to be 6 mm continuous fillet from E41XX electrodes.
All welds shall be general purpose welds unless noted otherwise.
Structural purpose welds shall be denoted thus 'SP'.
Butt welds where indicated in the drawings are to be complete penetration butt welds as defined in AS 1554.
Welding symbols to AS 1101 Part 3.

S6. Concrete encased steelwork shall be wrapped with 665 mesh and have a minimum of 50 cover unless noted otherwise.

S7. High strength friction grip bolts, nuts and washers shall comply with the relevant requirements of AS 1252, shall be installed in accordance with AS 1511 and shall be tightened to the correct tension using approved load indicating washers. Contact surfaces of all high strength friction grip bolted connections shall be left unpainted.

STEELWORK CONT.

S8 Structural steelwork shall have the surface treatment in accordance with the specification.

ELEMENT	SURFACE CLEANING	PRIMING
All UNO	Sand blast to class 2 5	Dulux zincanode 304 (or equal) 75 micron minimum dry film thickness

NOTE. Concrete encased steelwork shall be left unpainted

S9. The builder shall provide all cleats and drill all holes necessary for fixing steel to steel and timber to steel whether or not detailed in the drawings.

S10 All the requirements of the A.C.S.E. Structural Steel Specification Document 2 shall apply.

S11 All fxing devices bolts, brackets etc shall be hot dipped galvanised

BLOCKWORK

B1. All workmanship and materials shall be in accordance with NZS 4210.

B2. Strengths of blocks and type of mortar shall be as follows:

ELEMENT	MATERIAL	STRENGTH (CS) OR CLASS	MORTAR TYPE
Blockwork	Conc Block	12 MPa	1 0 25 3

B3. Reinforced concrete blockwork shall comply with the following U.N.O.:-

- Blocks shall be 12 MPa conforming to NZS 3102
- Mortar shall comprise 1 cement: 0.25 lime: 3 sand.
- Provide cleanout holes at base of all walls and rod core holes to remove protruding motar fins
- Provide 55mm minimun cover from the outside of the blockwork to allow adequate grout cover.

B4. Minimum strength and type of grout shall be as follows:

ELEMENT	MINIMUM STRENGTH	TYPE
Core Fill	17 5 MPa	3 8 4

Core fill shall comply with the following U.N.O.

- It shall have a minimum compressive strength of 17.5 MPa when tested in accordace with Section 6 of NZS 3112: Part 2.
- It shall have a spread value within the range of 450mm to 580mm when tested in accordance with Section 11 of NZS 3112: Part 1.
- Core fill to comprise of 3 cement: 8 concreting sand: 4 core fill aggregate 13.2 - 4.75mm.
- Where core fill grout is to be site mixed a test mix will be produced for sampling and compression testing in accordance with NZS 3112: Part 2. The compressive strength of this test mix to be 25MPa minimum to to allow for site variations.

B5. No masonry walls are to be erected on suspended slabs or beams until all propping has been removed.

B6. Builder to provide temporary propping to all walls where required for stability during construction.

B7. Backfill to retaining walls to be free draining granular material. Provide subsoil drain or weep holes.

B8. Blockwork Reinforcement

200 Blockwork : Vertically at corners, sides of openings, end of walls, intersections and at 600 crs maximum with 16Ø
Horizontally at top of walls, top & bottom of openings and at every 3rd course max. with 16 Ø in knock out bond block.

150 Blockwork : Vertically at corners, sides of openings, ends of walls, intersections and at 600 crs maximum with 12Ø
Horizontally at top of walls, top & bottom of openings and at every 3rd course max with 16 Ø in knock out bond block.

100 Blockwork : Vertically as for 150 blockwork but with 10C
Horizontally as for 150 blockwork but with 2R6
Pass all horizontally through columns
Concrete fill all block cavities.

TIMBER

T1 All workmanship shall be done in accordance with AS 1720 1 SAA Timber Structures Codes

T2 All timber shall be No 1 framing grade as defined in National Grading Rules for Fiji Timbers

T3 All timber shall be FIJI PINE F7 Stress Grade or equivalent unless noted otherwise

T4 Unless noted otherwise all bolts in timber construction to be 16 diameter commercial bolts of grade 4 6 snug tight (M16-4 6/S) conforming to AS 1111 with washers as specified

T5 End and edge distances for bolts where not specified shall be in accordance with the provisions of AS 1720 1

NOTE

Details and Sections on these drawings are cross-referenced by the following system -

Section or Detail No → 5
Sheet No, Where Section or Detail is drawn → S03

DRAFTING ABBREVIATIONS

ALT	ALTERNATE	RSA	ROLLED STEEL ANGLE
APPROX.	APPROXIMATE	RSC	ROLLED STEEL CHANNEL
ADDN	ADDITIONAL	RSJ	ROLLED STEEL JOIST
B	BOTTOM	STIFF	STIFFENER
BLK	BLOCKWALL	SIM	SIMILAR
B/W	BOTHWAYS	SJ	SAWCUT JOINT
C/L	CENTRE LINE	STG	STAGGER
C/C	CENTRE TO CENTRE	STRP	STIRRUP
C/S	COURSES	STR, STA	STARTER
C A R	COVER ALL AROUND	SYM	SYMMETRICAL
CHS	CIRCULAR HOLLOW SECTION	T	TOP
CJ	CONTROL JOINT	TFB	TAPER FLANGE BEAM
COL	COLUMN	THK	THICK
CONC	CONCRETE	TOC	TOP OF CONCRETE
CONN	CONNECTION	TOS	TOP OF STEEL
C O S	CHECK ON SITE	TRM	TRIMMER
CVR	COVER	TYP	TYPICAL
CRS	CENTRES	UB	UNIVERSAL BEAM
D	DEFORMED BAR GRADE 300	UC	UNIVERSAL COLUMN
		UNO	UNLESS NOTED OTHERWISE
BD	BAR DIAMETER		
DIA	DIAMETER	U/S	UNDERSIDE
DJ	DOWELLED JOINT	VERT	VERTICAL
DPC	DAMP PROOF COURSE	VJ	VERTICAL JOINT
DWG/DRG	DRAWING	L	SINGLE RSA
EGL	EXISTING GROUND LEVEL		
EXTG	EXISTING		
EF	EACH FACE		
EW	EACH WAY		
EL	ELEVATION		
EX	OUT OF		
FF	FAR FACE		
FFL	FINISHED FLOOR LEVEL		
FGL	FINISHED GROUND LEVEL		
FL	FLAT		
GALV	GALVANISED		
G L	GROUND LEVEL		
G P C	GROUT PROOF COURSE		
HOR	HORIZONTAL		
I D	INSIDE DIAMETER		
KJ	KEYED JOINT		
L A R	LAP AT RANDOM		
LL	DOUBLE RSA (BACK TO BACK)		
LG	LONG		
MAX.	MAXIMUM		
MIN	MINIMUM		
MS	MILD STEEL		
N	NEW		
NDT	NON-DESTRUCTIVE TESTING		
NF	NEAR FACE		
NTS	NOT TO SCALE		
O/A	OUTSIDE OVERALL		
O D	OUTSIDE DIAMETER		
PL	PLATE		
PC	PRECAST CONCRETE		
PSC	PRESTRESSED CONCRETE		
R	PLAIN BAR GRADE 300		
RC	REINFORCED CONCRETE		
REINF	REINFORCEMENT		
RHS	RECTANGULAR HOLLOW SECTION		
RL	REDUCED LEVEL		

NOTE

1 0 Contractor to confirm all dimension & detail on site prior to construction

2 0 Contractor to confirm all services locations on site prior to construction.

3 0 All fillet welds to to be 6 mm UNO

4 0 All steel & steel connections to be not dipped galvanized where exposed to the elements or in contact with the ground, or to be primed & painted otherwise

5 0 Engineer to inspect & confirm.

5 1 Ground condition prior to the construction of the foundation footing & piles. (ASSUMED BEARING CAPACITY 150KPA ALLOWABLE)

5 2 Construction of all elements of the building

5 3 All fill material

ALL MEASUREMENTS IN MILLIMETERS. R- RESIDENTIAL, C-COMMERCIAL, I-INDUSTRIAL, M-MECHANICAL

ISOTECT ENGINEERS (FIJI) PTE LTD
CONSULTING CIVIL & STRUCTURAL ENGINEERS
Where Innovation Meets Quality Designs
P. O. BOX 435, NABUA
PH: 844 6827

Structures Checked for Safety & Soundness by:
Krishneel Sanjay Ram of ISOTECT ENGINEERS (FIJI) PTE LTD
Chartered & Registered Professional Engineer - Civil & Structural & Environment (Fiji, Australia & New Zealand)
B. Tech Civil - India, Dip. in Civil Engg - Fiji CMEngNZ CPEng IntPE(NZ) / APEC Engineer, MIEAust CPEng NPE APEC Engineer IntPE(Aus) MFIE, MASCE, MCSCE, MISCE & GMICE
SIGN:..... DATE: 19/02/24

Pacifika Building Designz
BUILDING DESIGNS & 3D WORKS / STRUCTURAL CONSULTATION / BUILDING SERVICES / PROJECT MANAGEMENT
Phone (679) 8315279
Email: colin.lene@yahoo.com
Office: Suva & Savusavu

GENERAL NOTES:
1. COPYRIGHT in all drawings, specifications and other documents and in the work executed from them remains the property of PACIFIKA BUILDING DESIGNZ
2. DIMENSIONS: Confirm all dimensions and profiles with Architectural drawings. Do not scale the drawings. If unsure about anything please ask the Architect for clarification.

CLIENT: IOM UN MIGRATION KOICA National Disaster Management Office

SHEET TITLE: STRUCTURAL NOTE

PROJECT: ROKOVUAKA MULTIPURPOSE EVACUATION CENTRE

SCALE: AS SHOWN	DRAWN BY: Colin A
DATE: 01 10 2023	PROJECT NO: 0273-23
SHEET NO: DWG-S00	REVISION NO: REV-NO
DECIPLINE: STRUCTURAL	

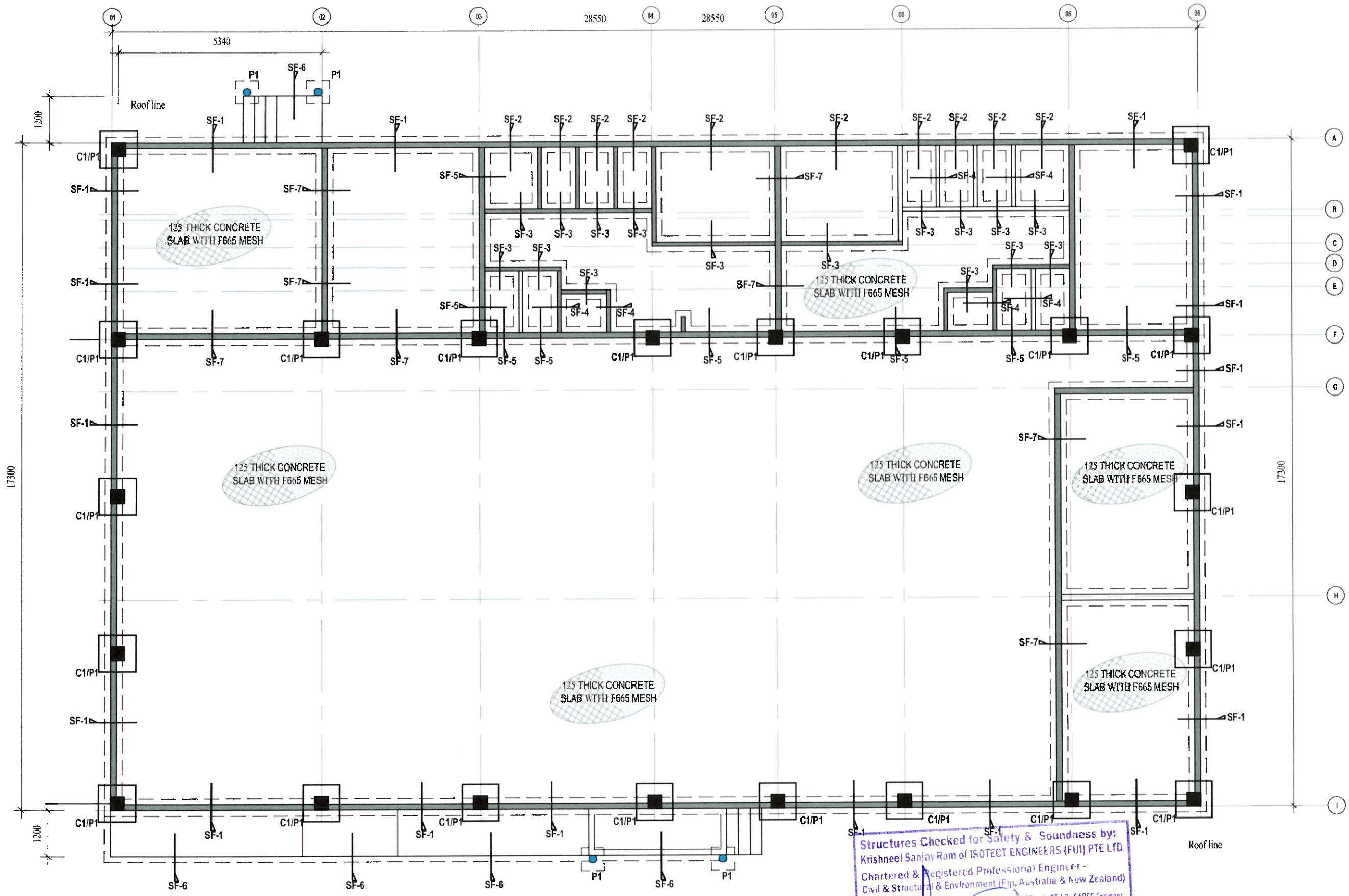

2 FOUNDATION PLAN
SCALE: 1:100

Structures Checked for Safety & Soundness by:
Krishneel Sanjay Ram of ISOTECT ENGINEERS (FIJI) PTE LTD
Chartered & Registered Professional Engineer -
Civil & Structural & Environment (Fiji, Australia & New Zealand)
B. Tech Civil - India, Dip in Civil Engg - Fiji CMEngNZ, CPEng IntPEINZ, / APEC Engineer,
MIEAust CPEng NER / APEC Engineer IntPE(Aus), MFIE, MASCE, MCSCE, MISCE & CMICE
SIGN: ..... DATE: 19/02/24

Pacifika Building Designz
BUILDING DESIGNS & 3D WORKS / STRUCTURAL CONSULTATION / BUILDING SERVICES / PROJECT MANAGEMENT
Phone (679) 8315279
Email colin.lane@yahoo.com
Office Suva & Savusavu

GENERAL NOTES:
1. COPYRIGHT in all drawings, specifications and other documents and in the work executed from them remains the property of PACIFIKA BUILDING DESIGNZ
2. DIMENSIONS Confirm all dimensions and profiles with Architectural drawings. Do not scale the drawings. If unsure about anything please ask the Architect for clarification.

CLIENT: IOM UN MIGRATION, KOICA, National Disaster Management Office

SHEET TITLE: FOUNDATION PLAN

PROJECT: ROKOVUAKA MULTIPURPOSE EVACUATION CENTRE

SCALE AS SHOWN	DRAWN BY Colin A
DATE 01.10.2023	PROJECT NO 0273-23
SHEET NO DWG-S01	REVISION NO REV-NO
DECIPLINE STRUCTURAL	

ALL MEASUREMENTS IN MILLIMETERS. R-RESIDENTIAL, C-COMMERCIAL, I INDUSTRIAL, M-MECHANICAL

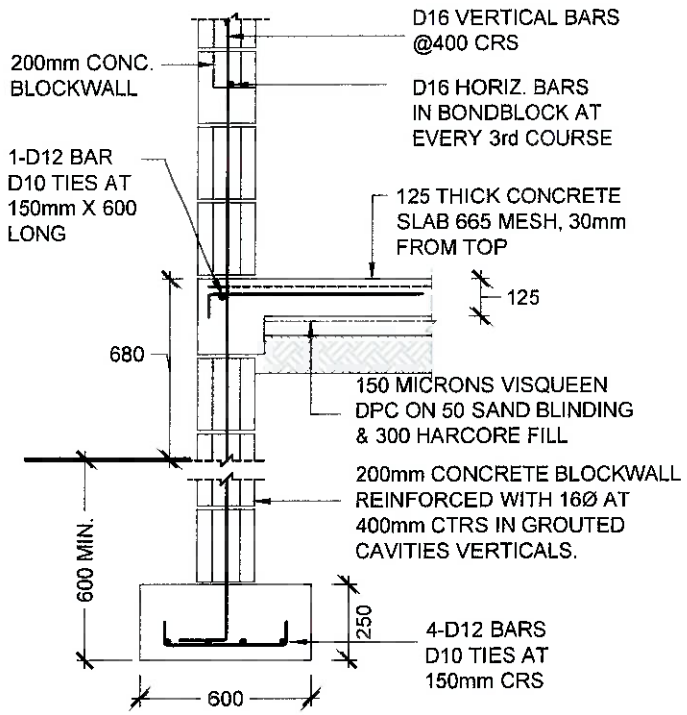

1 STRIP FOOTING - SF-1
TYPICAL FOOTING DETAIL
SCALE 1:20

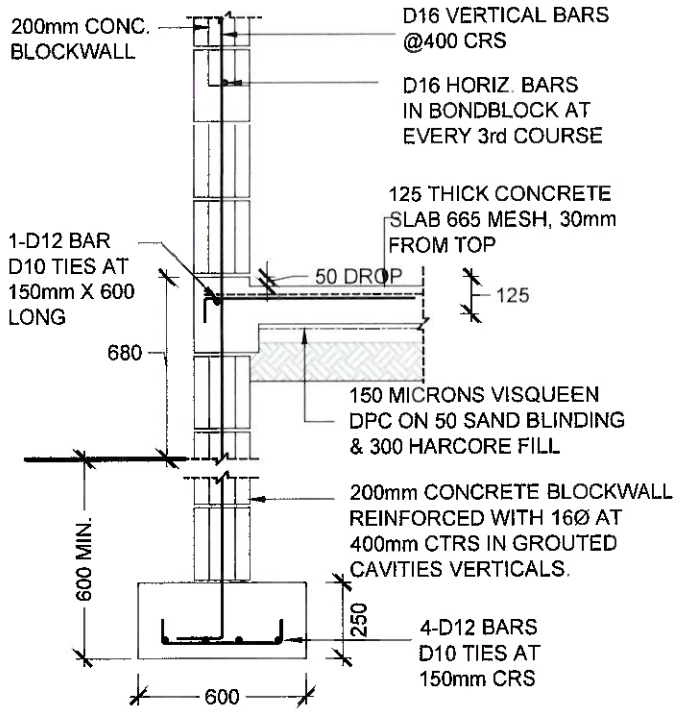

2 STRIP FOOTING - SF-2
TYPICAL FOOTING DETAIL
SCALE 1:20

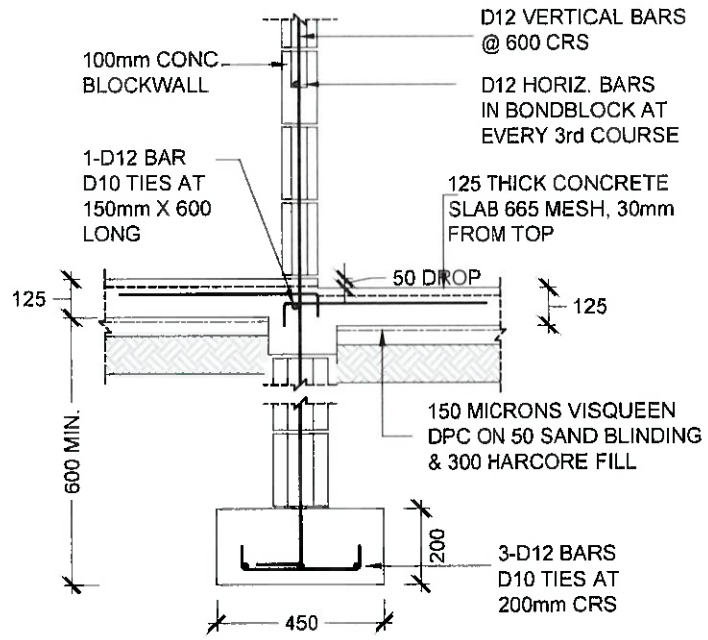

3 STRIP FOOTING - SF-3
TYPICAL FOOTING DETAIL
SCALE 1:20

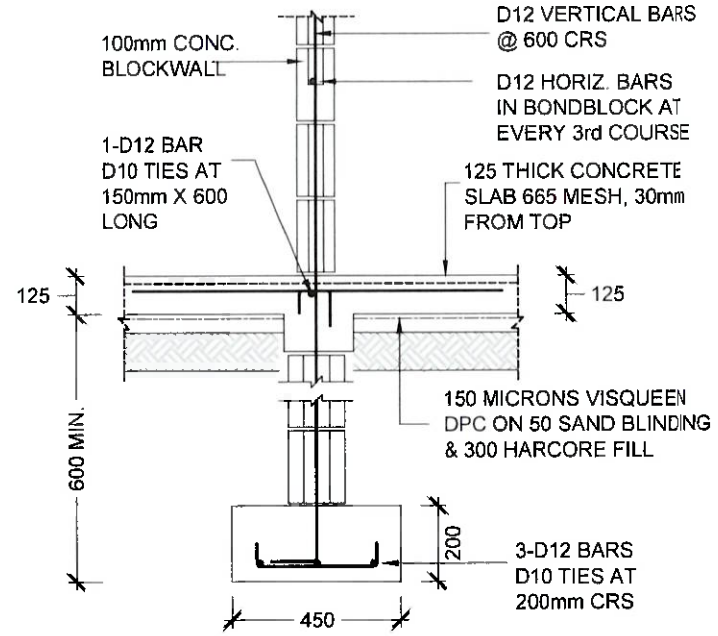

4 STRIP FOOTING - SF-4
TYPICAL FOOTING DETAIL
SCALE 1:20

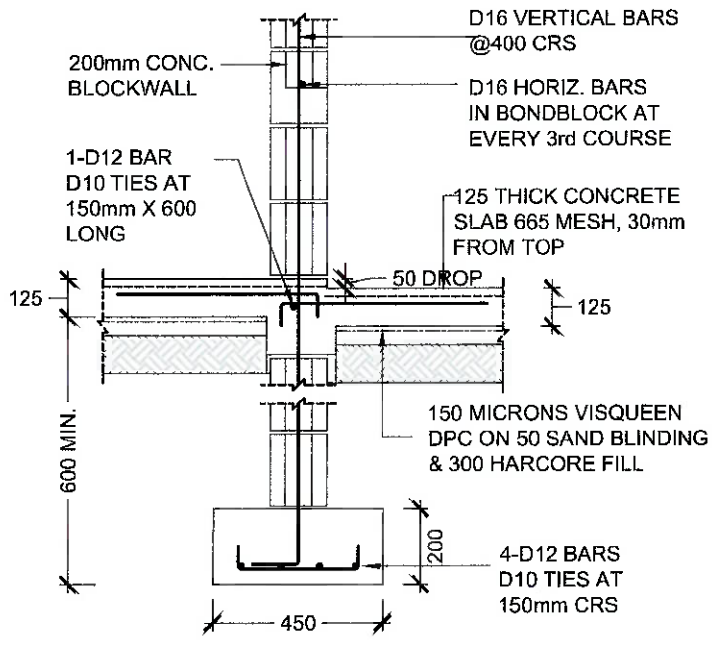

5 STRIP FOOTING - SF-5
TYPICAL FOOTING DETAIL
SCALE 1:20

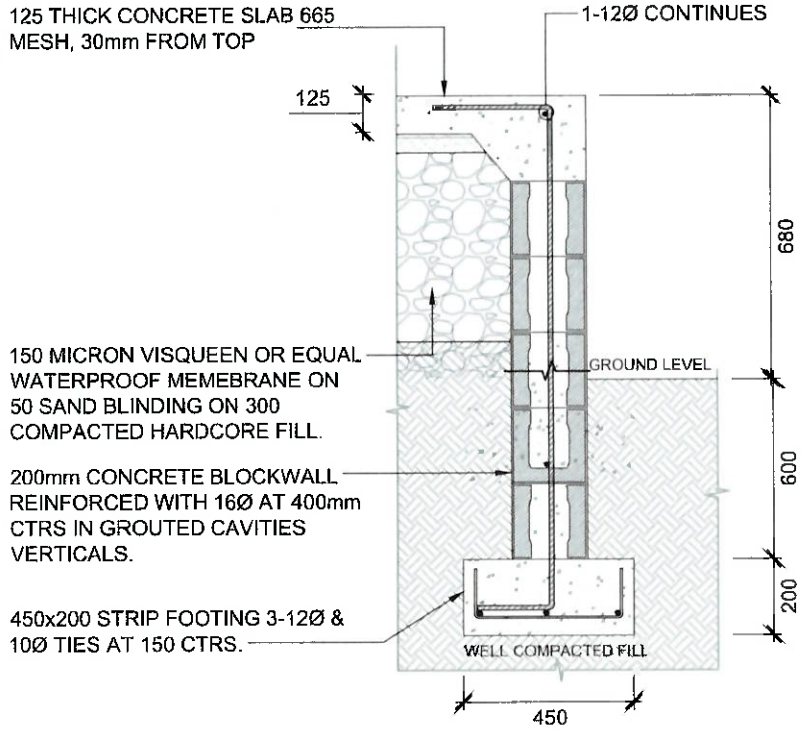

6 STRIP FOOTING - SF-6
TYPICAL FOOTING DETAIL
SCALE 1:20

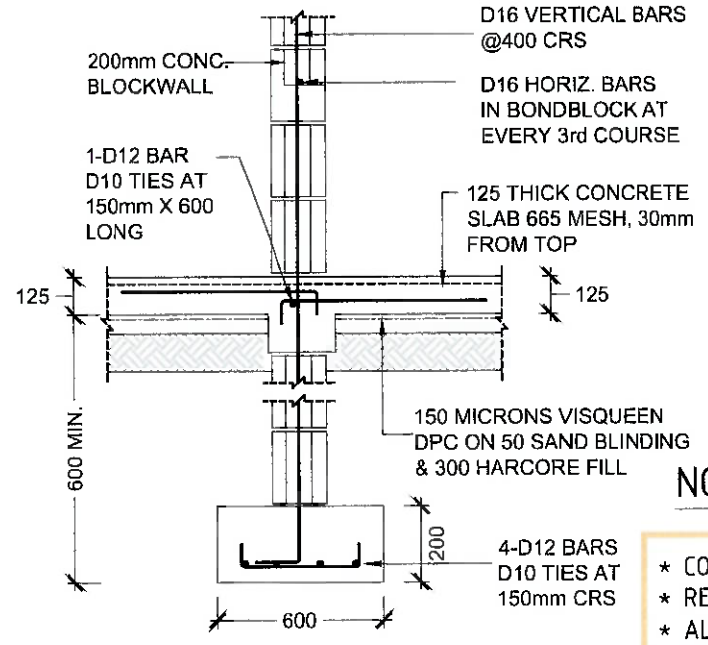

7 STRIP FOOTING - SF-7
TYPICAL FOOTING DETAIL
SCALE 1:20

Structures Checked for Correctness by:
Krishneel Sanjay Ram of ISOTECT ENGINEERS (FIJI) PTE LTD
Chartered & Registered Professional Engineer - Civil & Structural & Environment (Fiji, Australia & New Zealand)
B. Tech Civil - India, Dip. in Civil Engg - Fiji, MEngNZ CPEng IntPE-NZ / APEC Engineer, MIEAust CPEng NER APEC Engineer IntPE(Aus) MIFIE, MASCE, MCSCE, MISCE & GMICE
SIGN: ..... DATE: 19/02/24

NOTE

* CONCRETE STRENGHT TO BE 25MPa AT 28 DAYS
* REINF. GRADE TO BE 300 - 300MPa
* ALL FOOTING TO BE IN 300 MIN INTO SOLID SOAPSTONE OR UNDISTURBED CLAY SOIL
* ALL BLOCKWALL CAVITY WITH STEEL TO BE FULLY GROUTED
* GROUND FLOOR TO BE 300 MIN ABOVE THE HEIGHT POINT

Pacifika Building Designz
BUILDING DESIGNS & 3D WORKS / STRUCTURAL CONSULTATION / BUILDING SERVICES / PROJECT MANAGEMENT
Phone (679) 8315279
Email colin_lams@yahoo.com
Office Suva & Savusavu

GENERAL NOTES:
1. COPYRIGHT in all drawings, specifications and other documents and in the work executed from them remains the property of PACIFIKA BUILDING DESIGNZ.
2. DIMENSIONS: Confirm all dimensions and profiles with Architectural drawings. Do not scale the drawings. If unsure about anything please ask the Architect for clarification.

CLIENT: IOM UN MIGRATION, KOICA, National Disaster Management Office

SHEET TITLE: FOUNDATION DETAIL

PROJECT: ROKOVUAKA MULTIPURPOSE EVACUATION CENTRE

SCALE: AS SHOWN	DRAWN BY: Colin A
DATE: 01-10-2023	PROJECT NO: 0273-23
SHEET NO: DWG-S02	REVISION NO: REV-NO
DECIPLINE: STRUCTURAL	

ALL MEASUREMENTS IN MILLIMETERS. R - RESIDENTIAL, C - COMMERCIAL, I - INDUSTRIAL, M - MECHANICAL

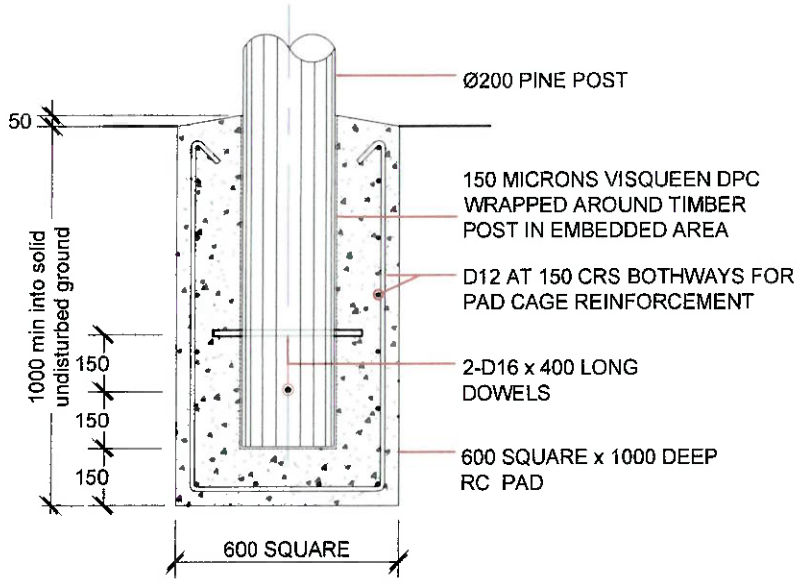

P1 POST DETAIL

SCALE. 1:20

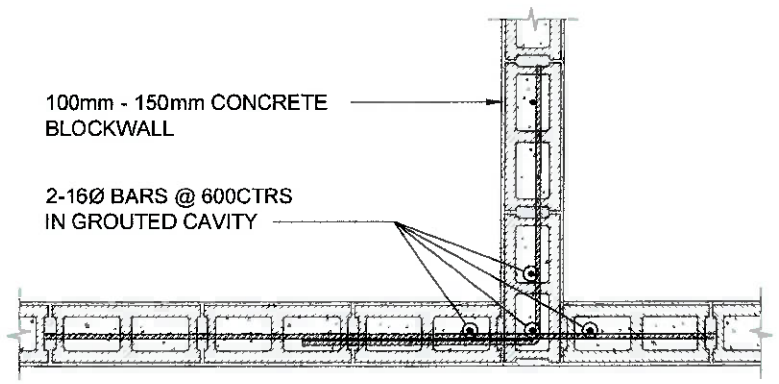

JUNCTION BLOCKWALL

TYPICAL JUNCTION DETAIL

SCALE: 1.20

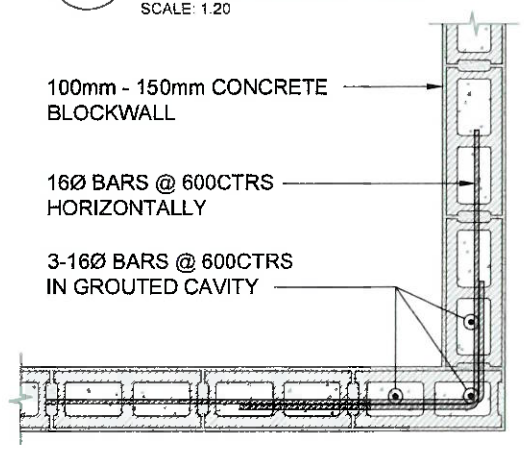

CORNER BLOCKWALL

TYPICAL CORNER DETAIL

SCALE: 1.20

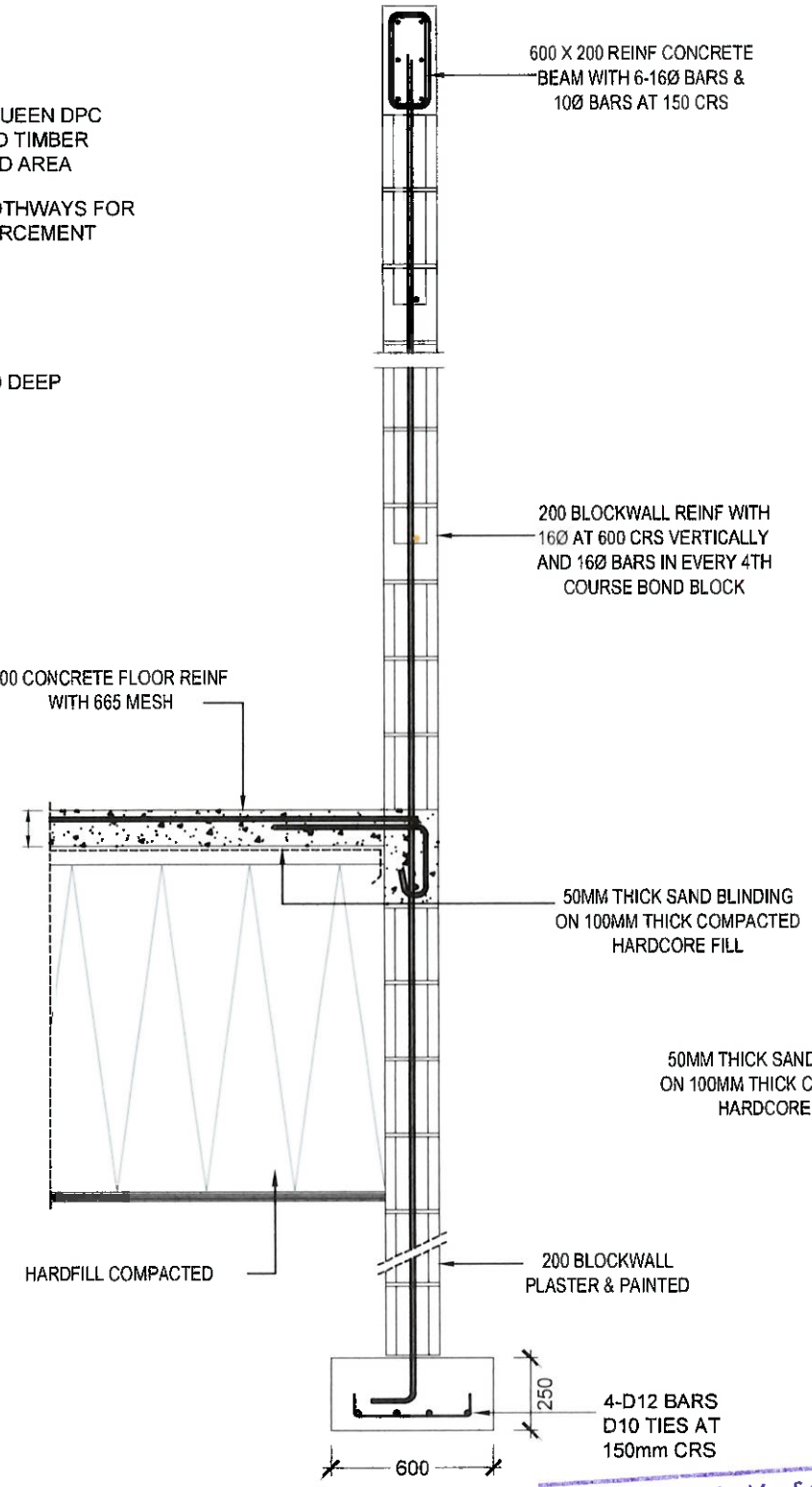

TYPICAL SECTION X -X

SCALE 1:20

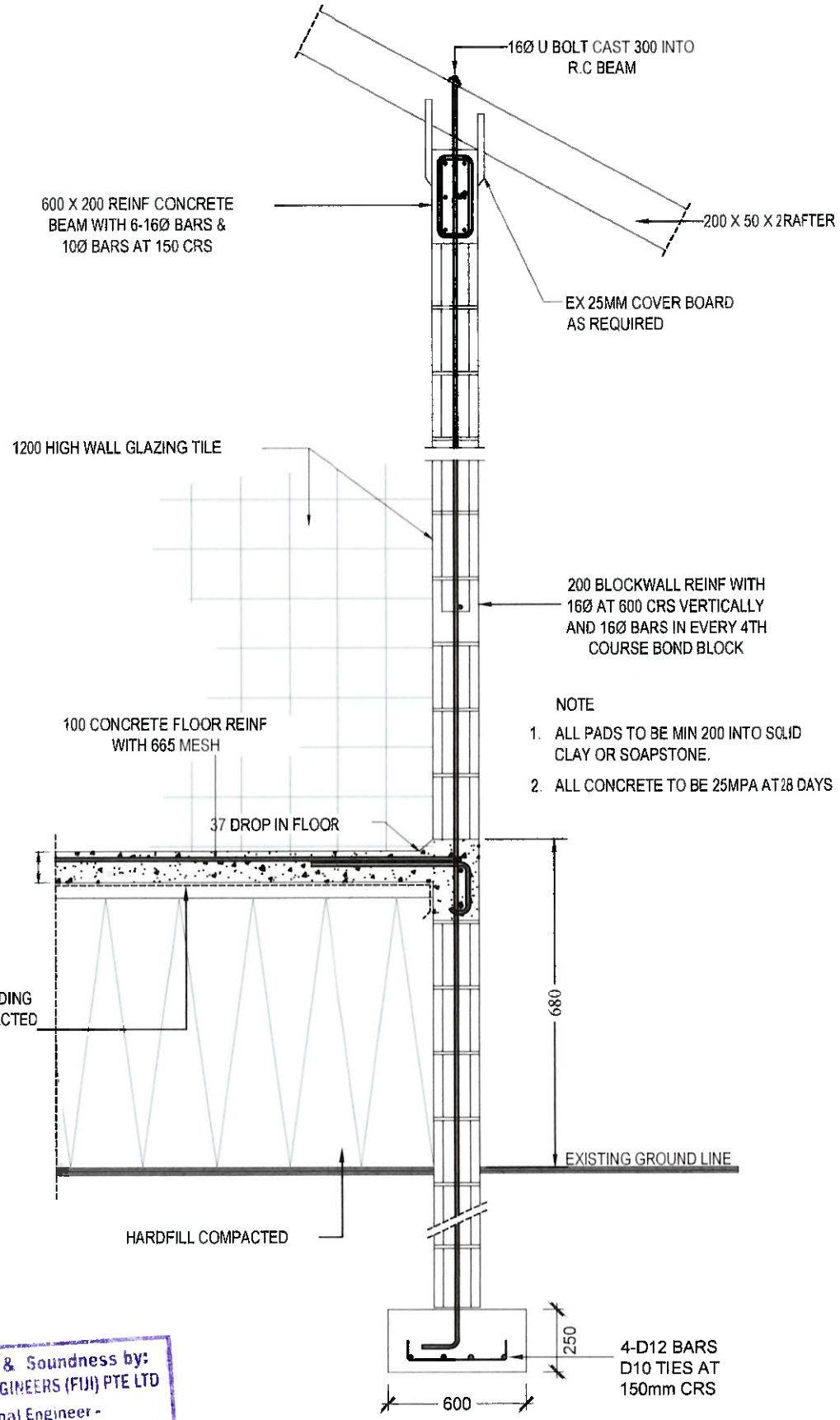

NOTE

1. ALL PADS TO BE MIN 200 INTO SOLID CLAY OR SOAPSTONE.
2. ALL CONCRETE TO BE 25MPA AT28 DAYS

SECTION THROUGH SHOWER

SCALE 1:20

Structures Checked for Safety & Soundness by:
Krishneel Sanjay Ram of ISOTECT ENGINEERS (FIJI) PTE LTD
Chartered & Registered Professional Engineer - Civil & Structural & Environment (Fiji, Australia & New Zealand)
B. Tech Civil - India, Dip. in Civil Engg - Fiji CMEngNZ CPEng IntPE(NZ) / APEC Engineer, MIEAust CPEng NEC ARPE Engineer IntPE(Aus), MIPE, MASCE, MCSCE, MuSCE & GMICE
SIGN: ..... DATE: 19/02/24

ALL MEASUREMENTS IN MILLIMETERS. R-RESIDENTIAL, C-COMMERCIAL, I-INDUSTRIAL, M-MECHANICAL

Pacifika Building Designz
BUILDING DESIGNS & 3D WORKS / STRUCTURAL CONSULTATION / BUILDING SERVICES / PROJECT MANAGEMENT
Phone: (679) 8315279
Email: colin_lena@yahoo.com
Office: Suva & Savusavu

GENERAL NOTES:

1. COPYRIGHT in all drawings, specifications and other documents and in the work executed from them remains the property of PACIFIKA BUILDING DESIGNZ
2. DIMENSIONS: Confirm all dimensions and profiles with Architectural drawings. Do not scale the drawings. If unsure about anything please ask the Architect for clarification.

CLIENT: IOM UN MIGRATION, KOICA, National Disaster Management Office

SHEET TITLE: FOUNDATION DETAIL

PROJECT: ROKOVUAKA MULTIPURPOSE EVACUATION CENTRE

SCALE: AS SHOWN	DRAWN BY: Colin A
DATE: 01-10-2023	PROJECT NO: 0273-23
SHEET NO: DWG-S03	REVISION NO: REV-NO
DECIPLINE: STRUCTURAL	

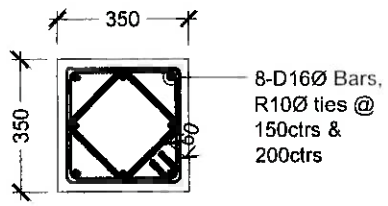

Section a-a Detail
SCALE 1:20

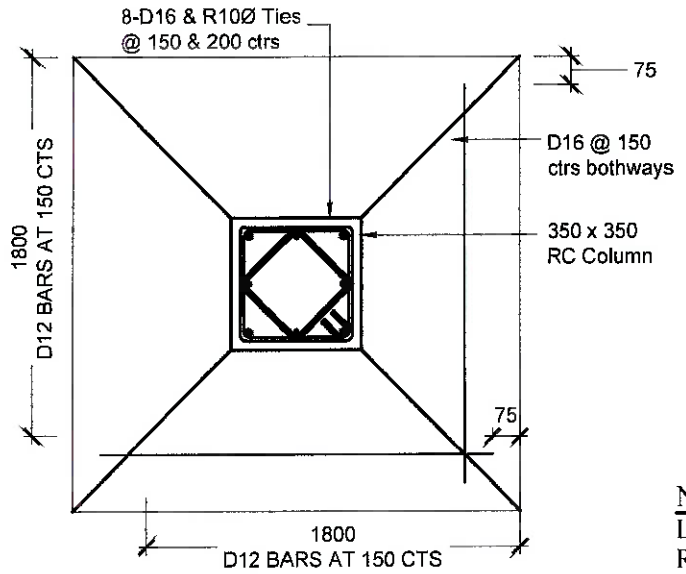

PAD DETAIL (C1/P1)
SCALE 1:20

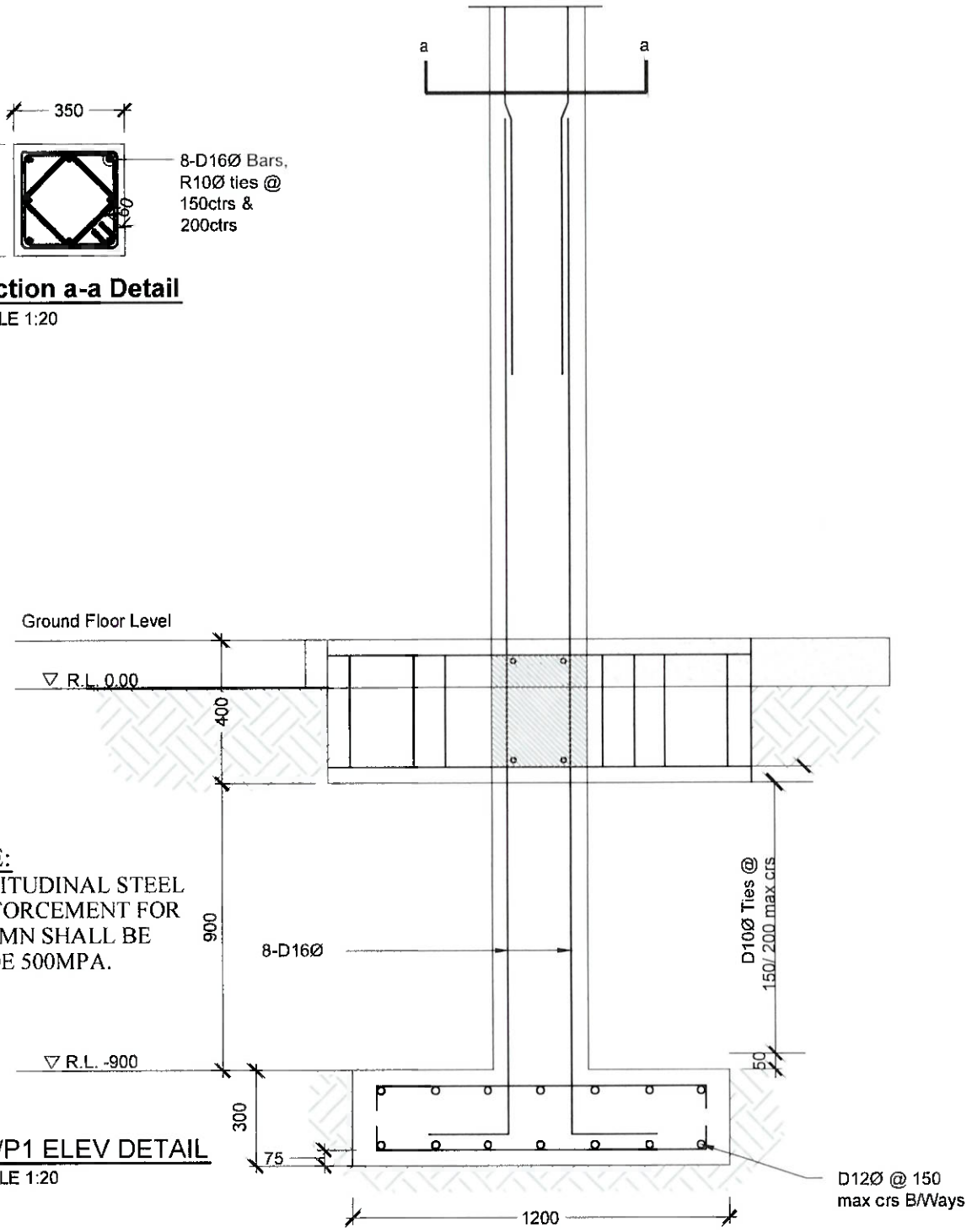

NOTE:
LONGITUDINAL STEEL REINFORCEMENT FOR COLUMN SHALL BE GRADE 500MPA.

C1/P1 ELEV DETAIL
SCALE 1:20

Structures Checked for Safety & Soundness by:
Krishneel Sanjay Ram of ISOTECT ENGINEERS (FIJI) PTE LTD
Chartered & Registered Professional Engineer -
Civil & Structural & Environment (Fiji, Australia & New Zealand)
B. Tech Civil - India, Dip. in Civil Engg - Fiji CMEngNZ CPEng IntPE(NZ) / APEC Engineer,
MIEAust CPEng NER RPEC Engineer IntPE(Aus), MFIE, MASCE, MCSCE, MISCE & GMICE
SIGN: ..... DATE: 19/02/24

ALL MEASUREMENTS IN MILLIMETERS. R-RESIDENTIAL, C-COMMERCIAL, I-INDUSTRIAL, M-MECHANICAL

Pacifika Building Designz
BUILDING DESIGNS & 3D WORKS / STRUCTURAL CONSULTATION / BUILDING SERVICES / PROJECT MANAGEMENT
Phone.(679) 8315279
Email colin_lana@yahoo.com
Office Suva & Savusavu

01 **FLOOR PLAN**
Scale 1:100@A3

GENERAL NOTES:
1. COPYRIGHT in all drawings, specifications and other documents and in the work executed from them remains the property of PACIFIKA BUILDING DESIGNZ.
2. DIMENSIONS Confirm all dimensions and profiles with Architectural drawings. Do not scale the drawings. If unsure about anything please ask the Architect for clarification.

CLIENT: IOM UN MIGRATION KOICA National Disaster Management Office

SHEET TITLE: **FOUNDATION DETAIL**

PROJECT

SCALE: SCALE	DRAWN BY: DRAWN
DATE: DATE	PROJECT NO: 0273-23
SHEET NO: DWG-S04	REVISION NO: REV-NO
DECIPLINE:	

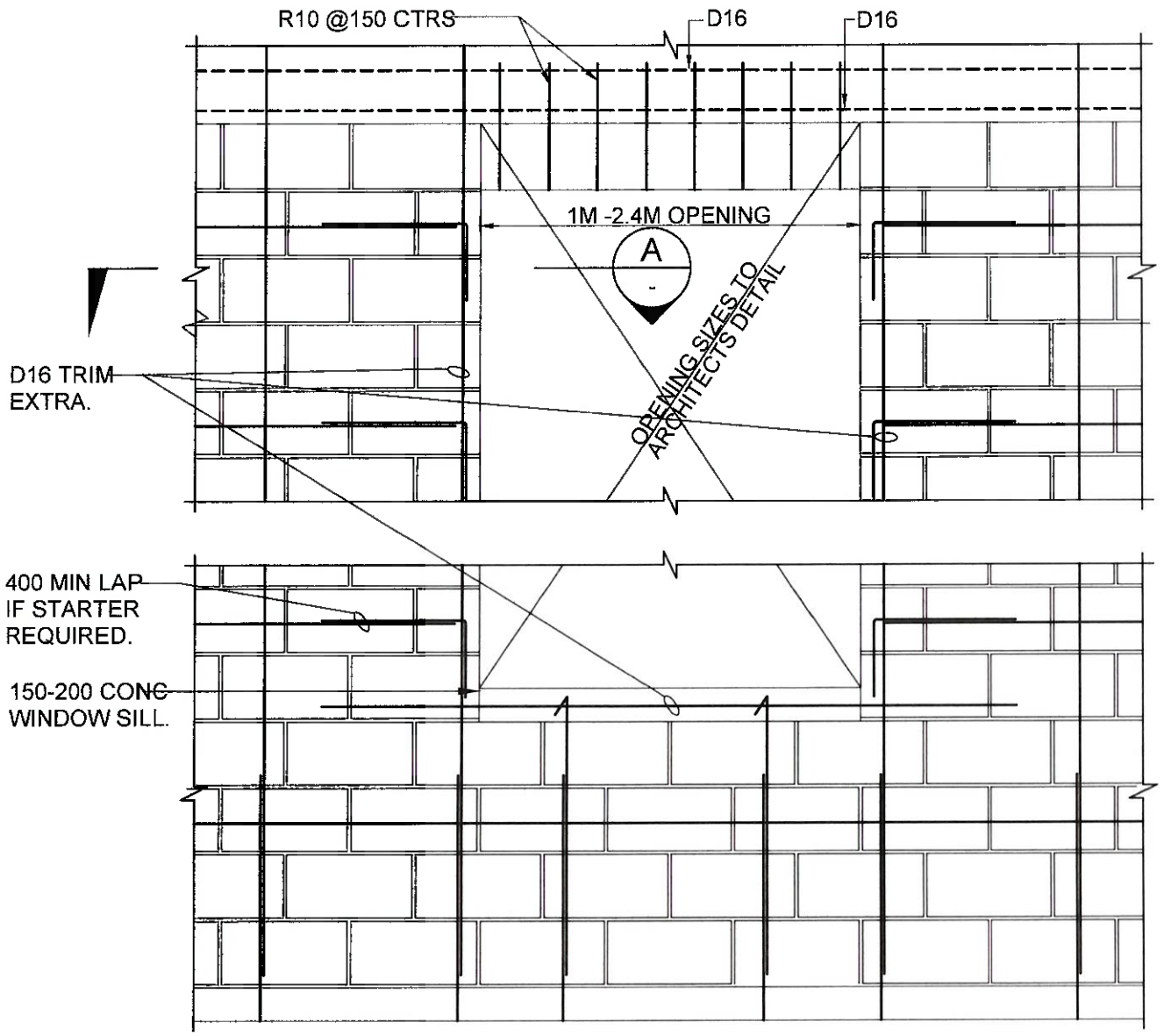

TYPICAL WINDOW OPENING DETAIL

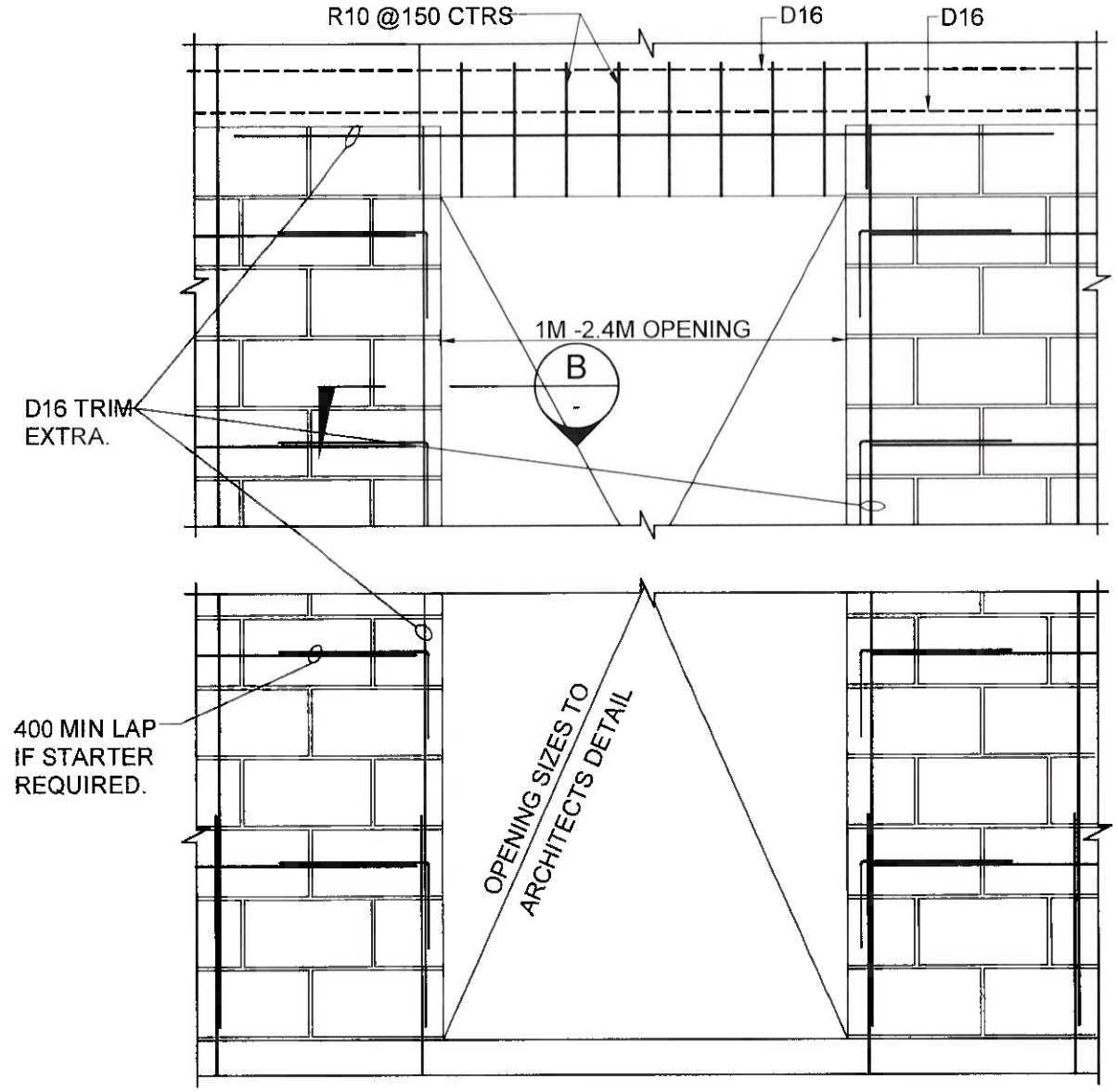

TYPICAL DOOR OPENING DETAIL

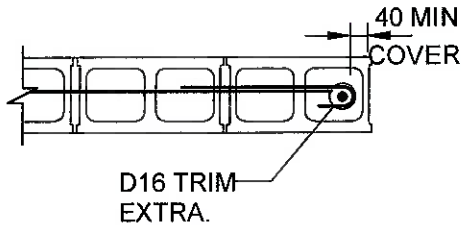

SECTION A
SCALE = 1:20

NOTE:
openings less than 1m are to have a minimum of 1/d16 in lintel block cousre.opening over 2.4m and not specifically detailed elsewhere are to be refered to the engineers for design.

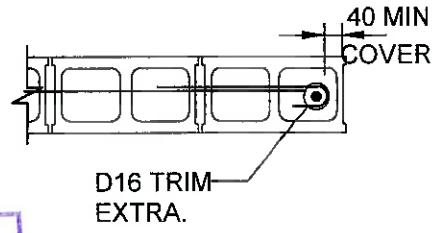

SECTION B
SCALE = 1:20

Structures Checked for Safety & Soundness by:
Krishneel Sanjay Ram of ISOTECT ENGINEERS (FIJI) PTE LTD
Chartered & Registered Professional Engineer -
Civil & Structural & Environment (Fiji, Australia & New Zealand)
B. Tech Civil - India, Dip. in Civil Engg - Fiji CMEngNZ CPEng IntPEINZ / ACEC Engineer, MIEAust CPEng NER ARBA Engineer IntPE(Aus), MFIC MASCE, MCSCE, MaSCE & CMICE
SIGN: ..... DATE: 19/02/24

Pacifika Building Designz
BUILDING DESIGNS & 3D WORKS / STRUCTURAL CONSULTATION / BUILDING SERVICES / PROJECT MANAGEMENT
Phone:(679) 8315279
Email colin_lane@yahoo.com
Office Suva & Savusavu

GENERAL NOTES:
1. COPYRIGHT in all drawings, specifications and other documents and in the work executed from them remains the property of PACIFIKA BUILDING DESIGNZ.
2. DIMENSIONS Confirm all dimensions and profiles with Architectural drawings. Do not scale the drawings. If unsure about anything please ask the Architect for clarification.

CLIENT: IOM UN MIGRATION KOICA National Disaster Management Office

SHEET TITLE: BLOCKWALL BINDING DETAIL & SECTION

PROJECT: ROKOVUAKA MULTIPURPOSE EVACUATION CENTRE

SCALE: AS SHOWN	DRAWN BY: Colin A
DATE: 01 10-2023	PROJECT NO: 0273-23
SHEET NO: DWG-S05	REVISION NO: REV-NO
DECIPLINE: STRUCTURAL	

ALL MEASUREMENTS IN MILLIMETERS. R RESIDENTIAL, C-COMMERCIAL, I-INDUSTRIAL, M MECHANICAL

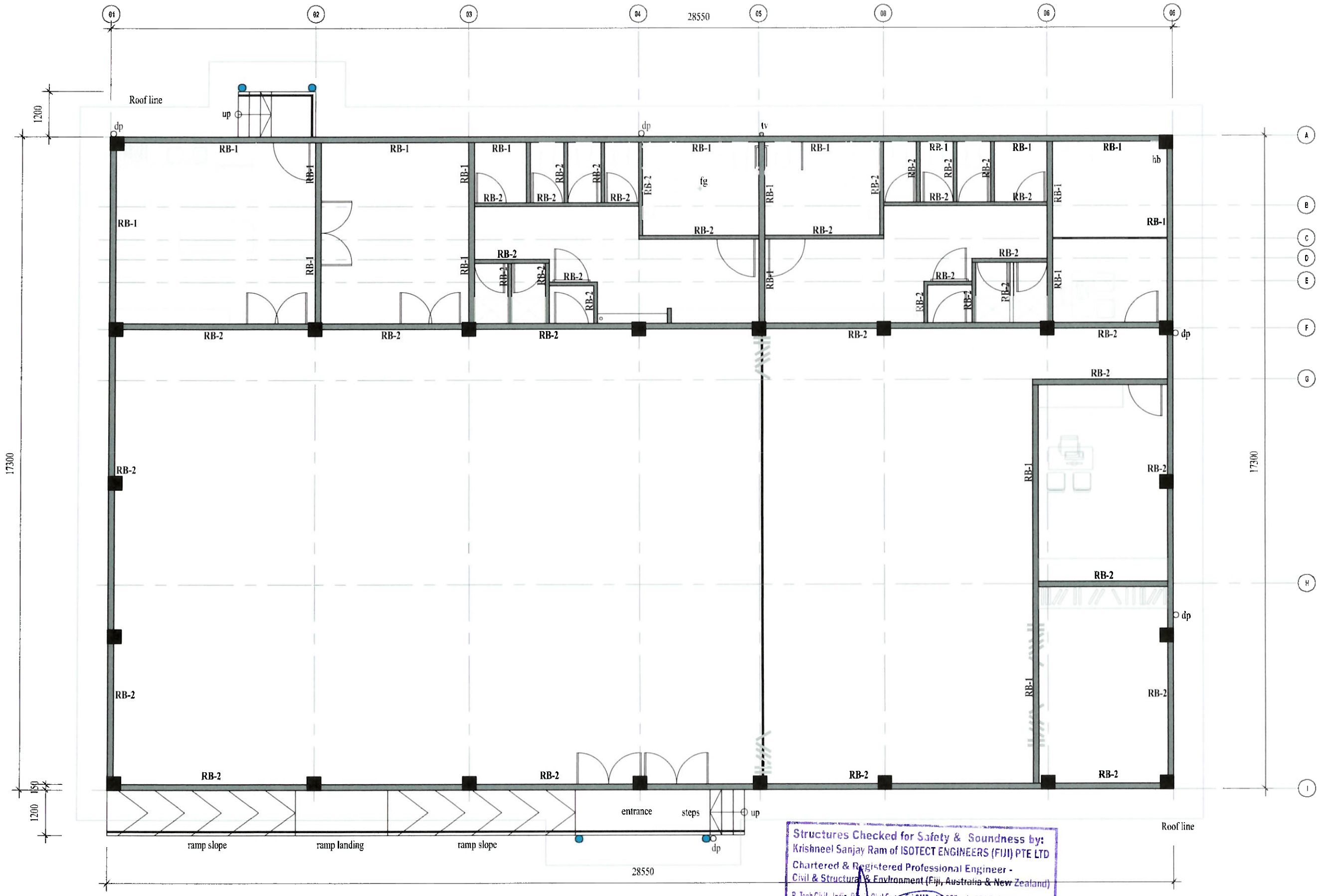

1 ROOF BEAM PLAN
SCALE: 1:100

Structures Checked for Safety & Soundness by:
Krishneel Sanjay Ram of ISOTECT ENGINEERS (FIJI) PTE LTD
Chartered & Registered Professional Engineer -
Civil & Structural & Environment (Fiji, Australia & New Zealand)
B. Tech Civil - India, UG in Civil Engg - Fiji CMEngNZ CPEng IntPE(NZ) / APEC Engineer, MIEAust CPEng NER APEC Engineer IntPE(Aus), MFIEAust MASCE, MICSCE, MJSCE & GMICE
SIGN: ..... DATE: 19/02/24

Pacifika Building Designz
BUILDING DESIGNS & 3D WORKS / STRUCTURAL CONSULTATION / BUILDING SERVICES / PROJECT MANAGEMENT
Phone (679) 8315279
Email colin_lana@yahoo.com
Office Suva & Savusavu

GENERAL NOTES:
1. COPYRIGHT in all drawings, specifications and other documents and in the work executed from them remains the property of PACIFIKA BUILDING DESIGNZ.
2. DIMENSIONS Confirm all dimensions and profiles with Architectural drawings. Do not scale the drawings. If unsure about anything please ask the Architect for clarification.

CLIENT: IOM UN MIGRATION, KOICA, National Disaster Management Office

SHEET TITLE: ROOF BEAM FRAMING PLAN

PROJECT: ROKOVUAKA MULTIPURPOSE EVACUATION CENTRE

SCALE: AS SHOWN	DRAWN BY: Colin A
DATE: 01-10-2023	PROJECT NO: 0273-23
SHEET NO: DWG-S06	REVISION NO: REV-NO
DECIPLINE: STRUCTURAL	

ALL MEASUREMENTS IN MILLIMETERS. R - RESIDENTIAL, C - COMMERCIAL, I - INDUSTRIAL, M - MECHANICAL

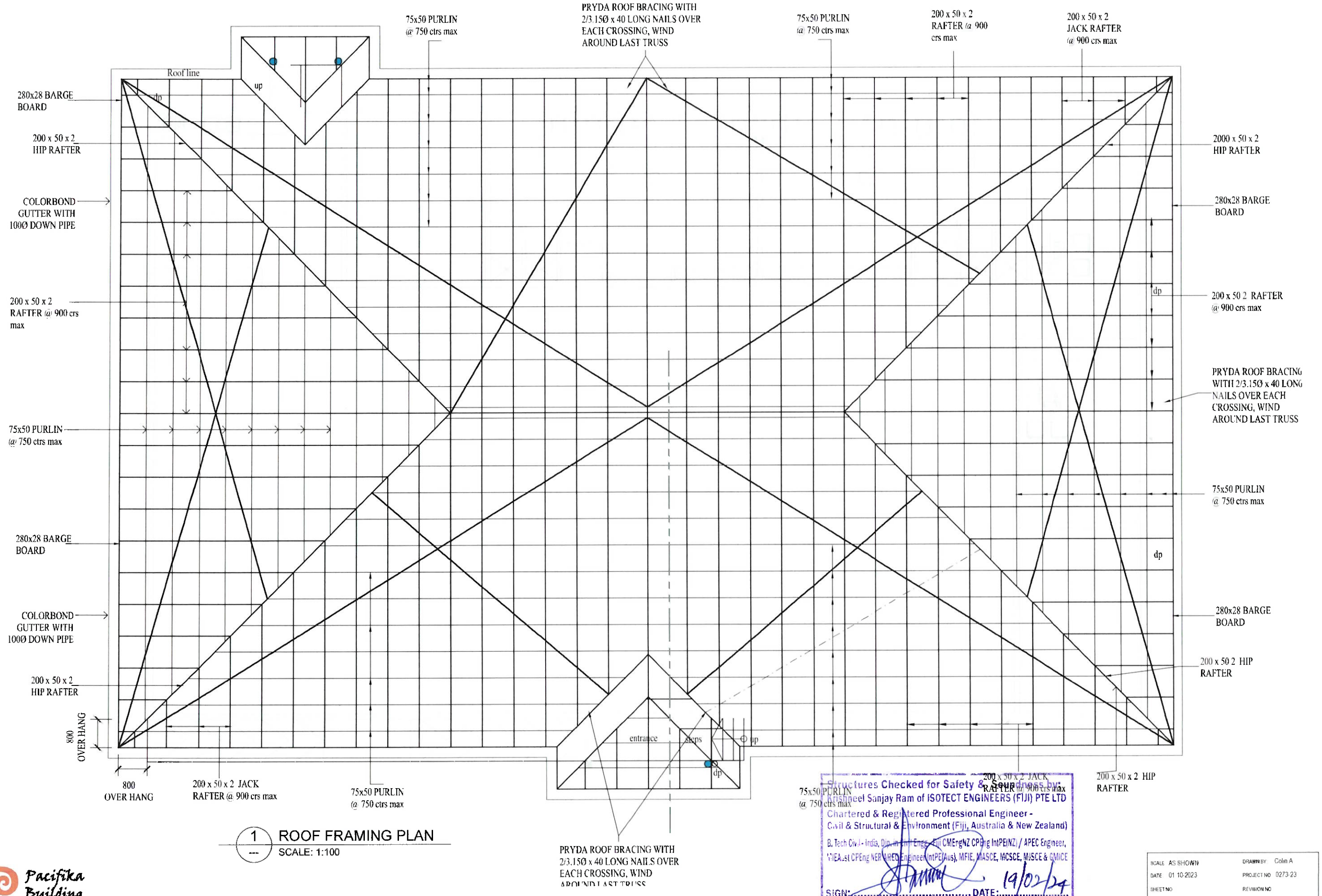

1 ROOF FRAMING PLAN
SCALE: 1:100

Structures Checked for Safety & Soundness by:
Engineer Sanjay Ram of ISOTECT ENGINEERS (FIJI) PTE LTD
Chartered & Registered Professional Engineer -
Civil & Structural & Environment (Fiji, Australia & New Zealand)
B. Tech Civil - India, Dip. in Int'l Engg - Fiji CMEngNZ CPEng IntPE(NZ) / APEC Engineer,
MIEAust CPEng NER RPEQ Engineer IntPE(Aus), MFIE, MASCE, MCSCE, MISCE & GMICE
SIGN: ..... DATE: 19/02/24

ALL MEASUREMENTS IN MILLIMETERS. R-RESIDENTIAL, C-COMMERCIAL, I-INDUSTRIAL, M-MECHANICAL

Pacifika Building Designz
BUILDING DESIGNS & 3D WORKS / STRUCTURAL CONSULTATION / BUILDING SERVICES / PROJECT MANAGEMENT
Phone (679) 8315279
Email colin.lenas@yahoo.com
Office: Suva & Savusavu

GENERAL NOTES:
1. COPYRIGHT in all drawings, specifications and other documents and in the work executed from them remains the property of PACIFIKA BUILDING DESIGNZ
2. DIMENSIONS Confirm all dimensions and profiles with Architectural drawings. Do not scale the drawings. If unsure about anything please ask the Architect for clarification.

CLIENT: IOM UN MIGRATION, KOICA, National Disaster Management Office

SHEET TITLE: ROOF FRAMING PLAN

PROJECT: ROKOVUAKA MULTIPURPOSE EVACUATION CENTRE

SCALE: AS SHOWN	DRAWN BY: Colin A
DATE: 01-10-2023	PROJECT NO: 0273-23
SHEET NO: DWG-S07	REVISION NO: REV-NO
DECIPLINE: STRUCTURAL	

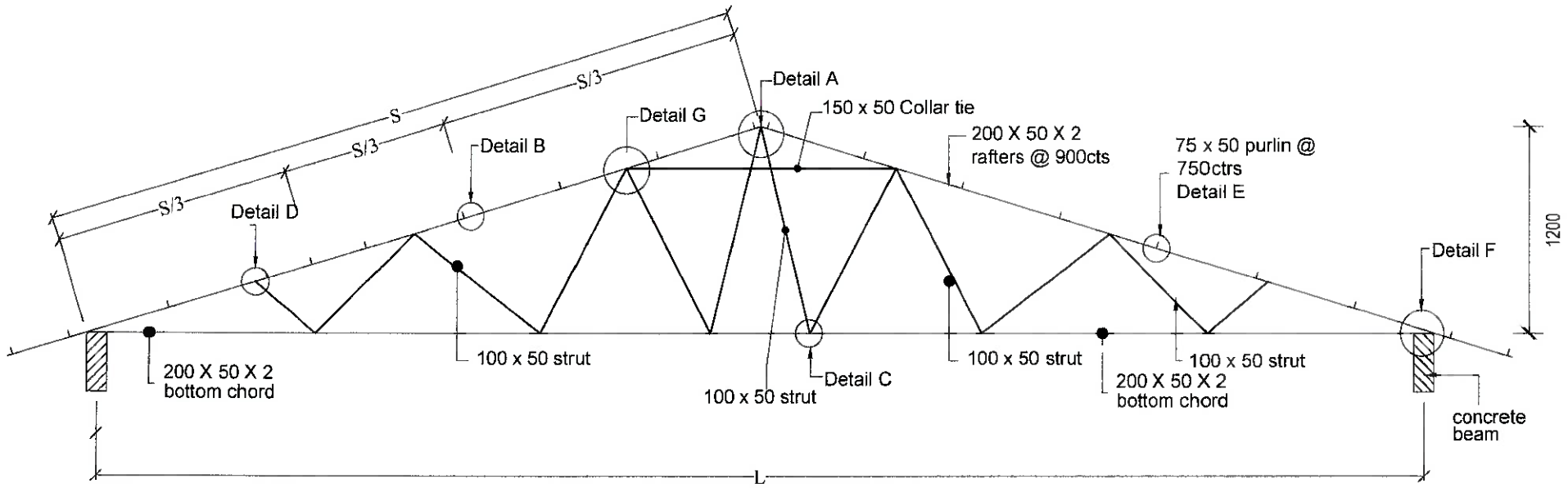

ROOF TRUSS SECTION
SCALE 1:50

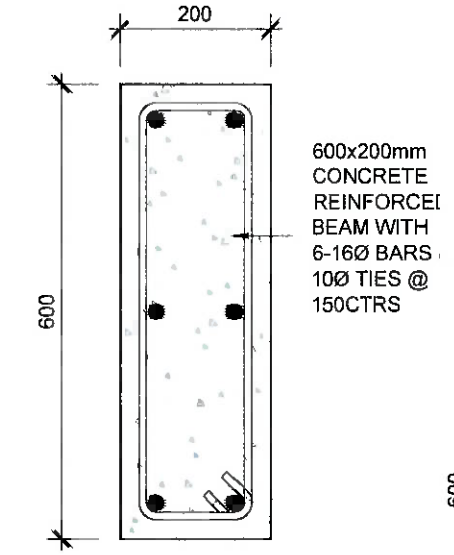

1 BEAM SECTION (RB-1)
TYPICAL CROSS SECTION
SCALE 1:10

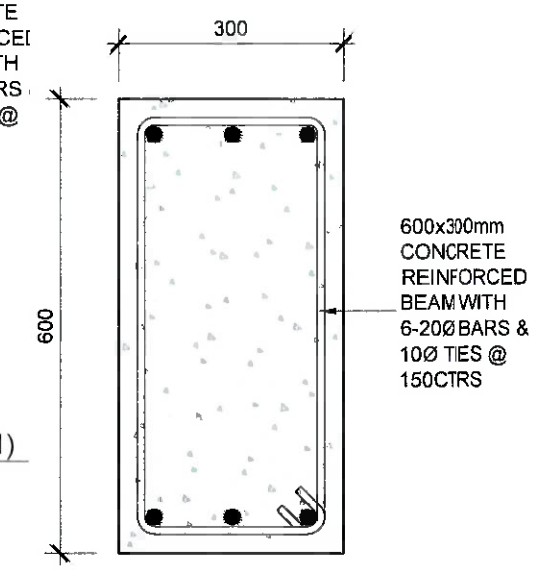

1 BEAM SECTION (RB-2)
TYPICAL CROSS SECTION
SCALE 1:10

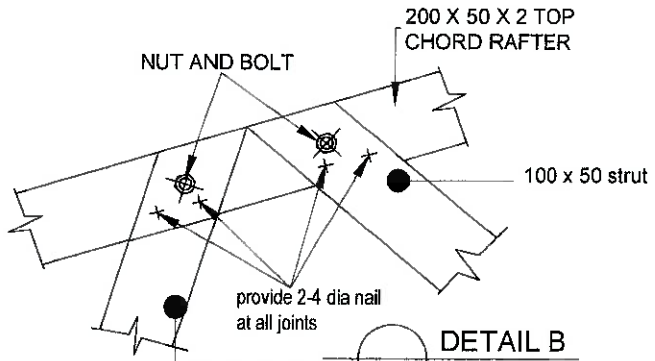

DETAIL B
SCALE: 1:10

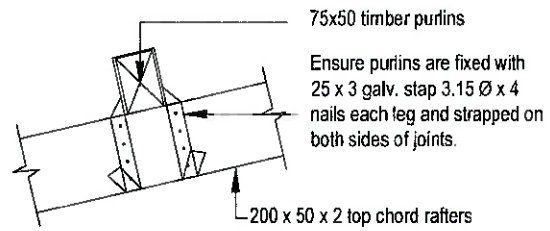

DETAIL E (PURLING FIXING DETAIL)
SCALE: 1:10

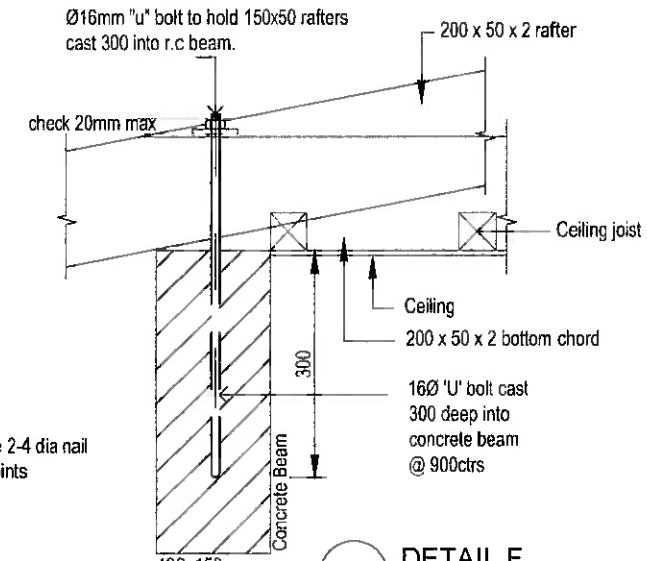

DETAIL F
SCALE: 1:10

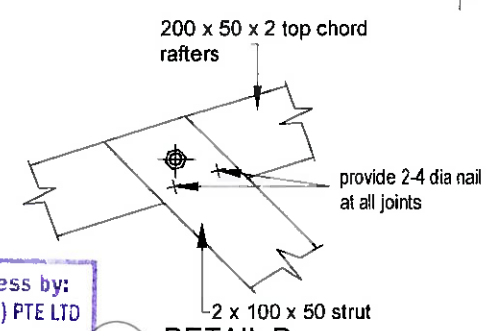

DETAIL D
SCALE: 1:10

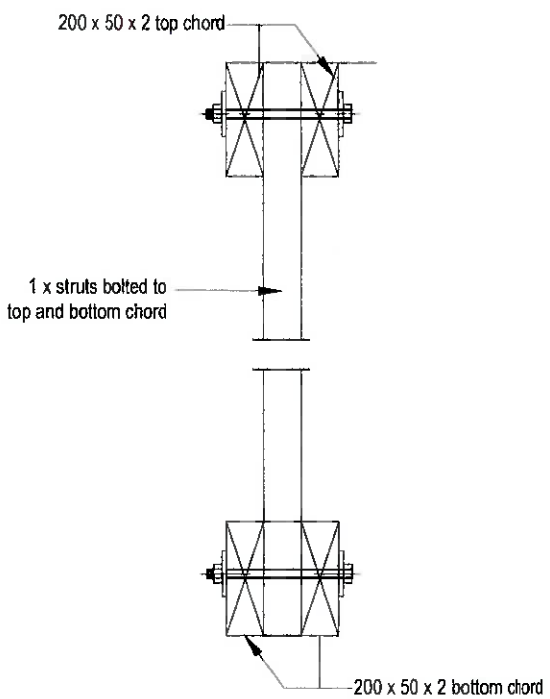

CHORD FIXING DETAIL
SCALE: 1:10

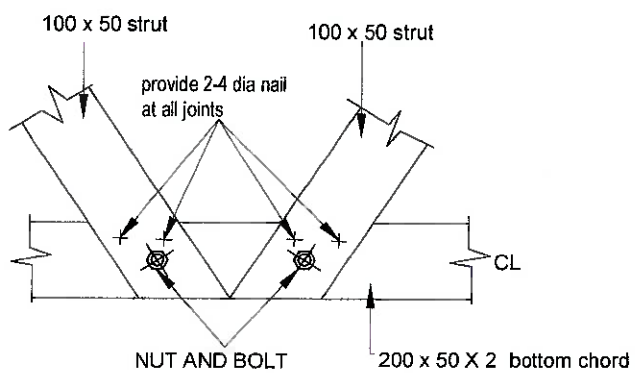

DETAIL C
SCALE: 1:10

Structures Checked for Safety & Soundness by:
Krishneel Sanjay Ram of ISOTECT ENGINEERS (FIJI) PTE LTD
Chartered & Registered Professional Engineer -
Civil & Structural & Environment (Fiji, Australia & New Zealand)
B. Tech Civil - India, Dip. in Civil Engg - Fiji CMEngNZ CPEng IntPE(NZ) / APEC Engineer,
MIEAust CPEng NER APEC Engineer IntPE(Aus), MIFIE, MASCE, MCSCE/MJSCE & GMICE
SIGN: ..... DATE: 19/02/24

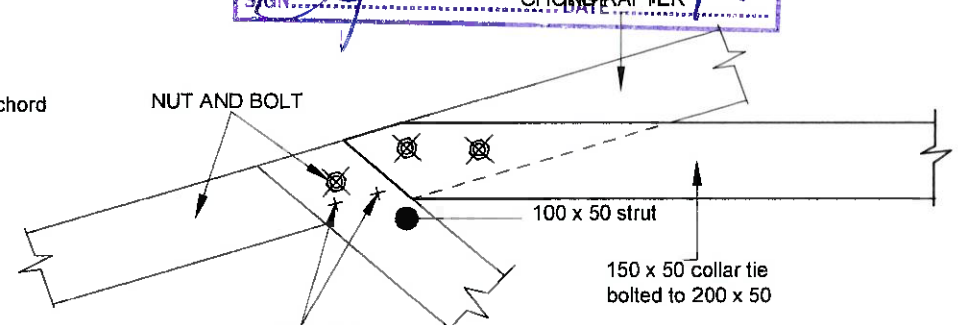

DETAIL G
SCALE: 1:10

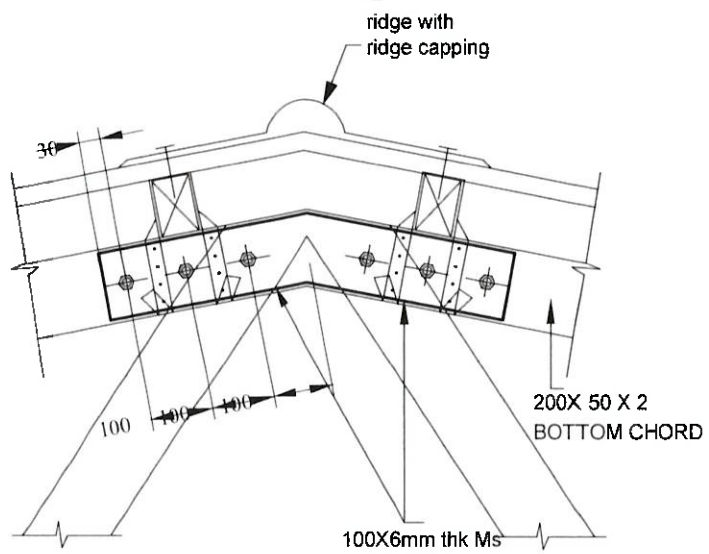

DETAIL A
SCALE: 1:10

ALL MEASUREMENTS IN MILLIMETERS. R-RESIDENTIAL, C-COMMERCIAL, I-INDUSTRIAL, M-MECHANICAL

Pacifika Building Designz
BUILDING DESIGNS & 3D WORKS / STRUCTURAL CONSULTATION / BUILDING SERVICES / PROJECT MANAGEMENT
Phone:(679) 8315279
Email: colin_lama@yahoo.com
Office: Suva & Savusavu

GENERAL NOTES:
1. COPYRIGHT in all drawings, specifications and other documents and in the work executed from them remains the property of PACIFIKA BUILDING DESIGNZ
2. DIMENSIONS: Confirm all dimensions and profiles with Architectural drawings. Do not scale the drawings. If unsure about anything please ask the Architect for clarification.

CLIENT: IOM UN MIGRATION, KOICA, National Disaster Management Office

SHEET TITLE: ROOF DETAIL

PROJECT: ROKOVUAKA MULTIPURPOSE EVACUATION CENTRE

SCALE: AS SHOWN	DRAWN BY: Colin A
DATE: 01-10-2023	PROJECT NO: 0273-23
SHEET NO: DWG-S08	REVISION NO: REV-NO
DECIPLINE: STRUCTURAL	

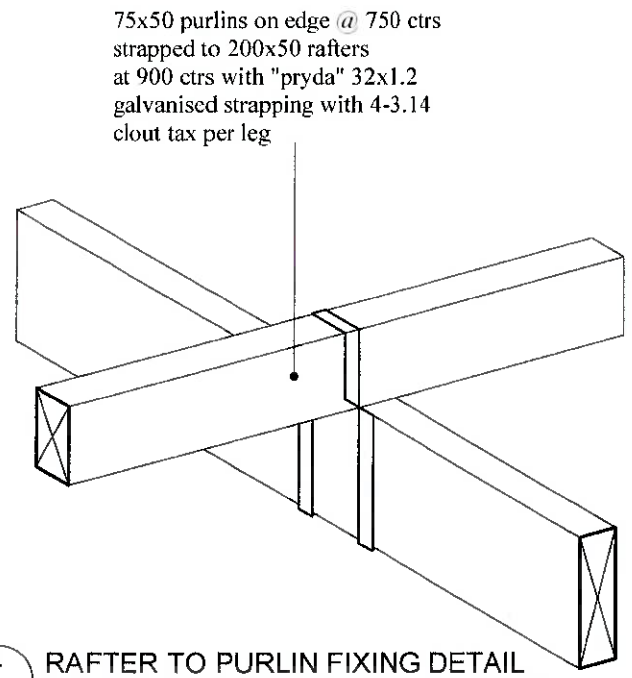

RAFTER TO PURLIN FIXING DETAIL
TYPICAL CROSS SECTION
SCALE: 1:10

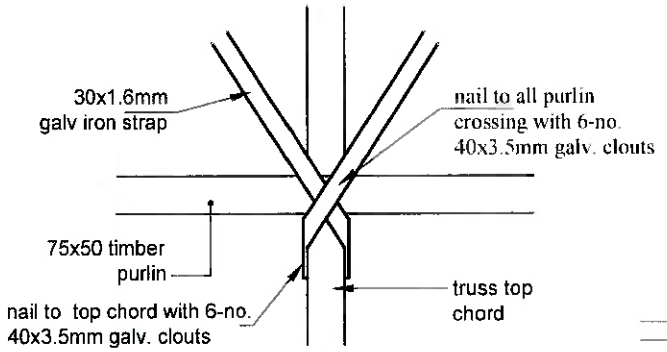

STRAPPING DETAIL
SCALE 1:10

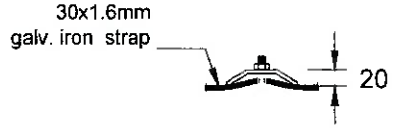

TENSIONING DEVICE
(1 PER STRAP)
SCALE 1:10

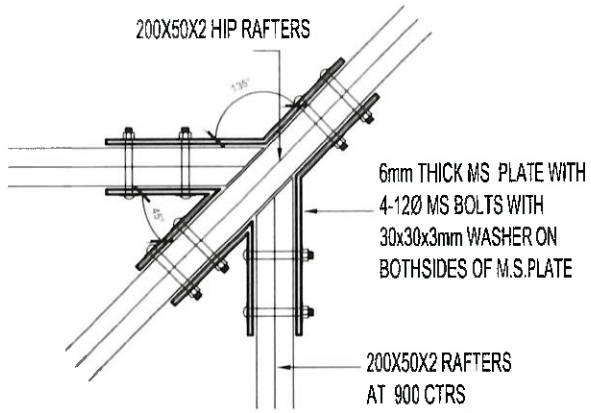

RAFTER TO HIP RAFTER FIXING DETAIL
SCALE 1:10

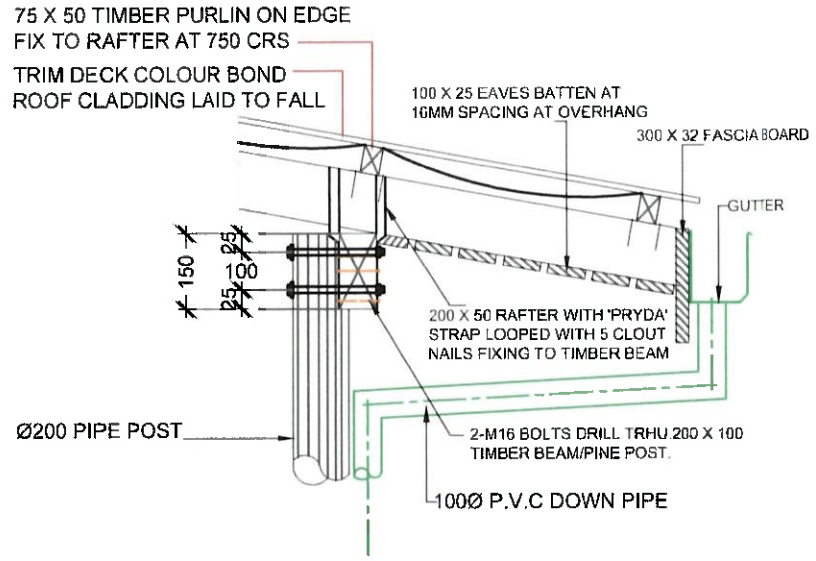

TIMBER BEAM FIXING AT TERRACE
SCALE 1:20

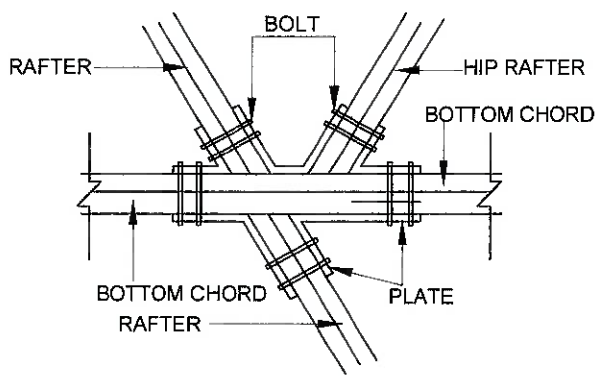

TRUSS TO HIP RAFTER CONNECTION
SCALE 1:20 (ITEM 2)

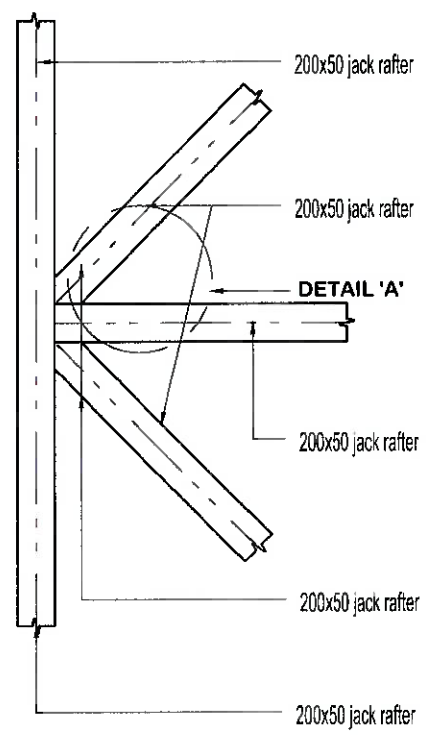

JACK RAFTER FIXING DETAIL
SCALE 1:10

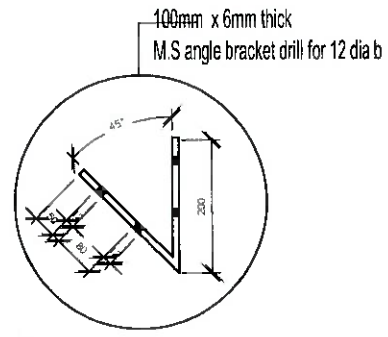

DETAIL A

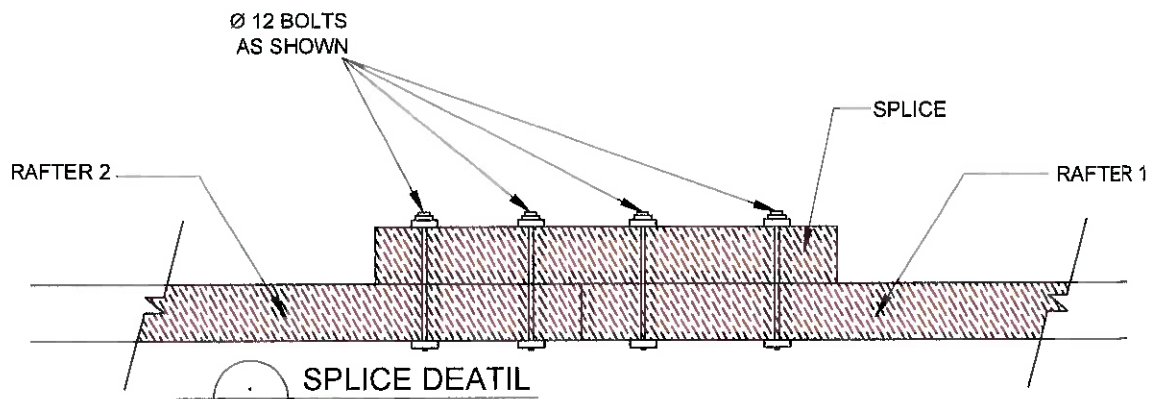

SPLICE DEATIL
SCALE 1:20

Structures Checked for Safety & Soundness by:
Krishneel Sanjay Ram of iSOTECT ENGINEERS (FIJI) PTE LTD
Chartered & Registered Professional Engineer
Civil & Structural & Environment (Fiji, Australia & New Zealand)
SIGN: ..... DATE: 19/03/24

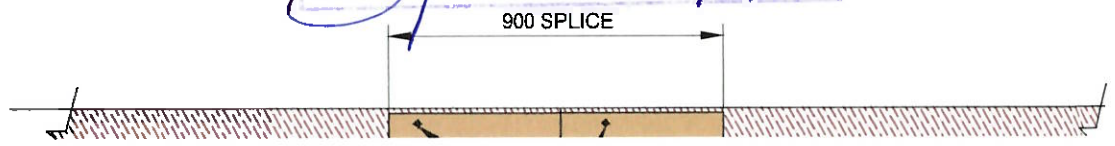

NOTES

1) ALL TIMBER SHALL BE F11 FRAMING GRADE.
2) ALL PRYDA NAIL PLATES TO BE EQUALLY PLACED ABOUT JOINTS.
3) PRYDA NAIL PLATES SHALL ONLY BE DRIVEN INTO CLEAR DEFECT FREE TIMBER.
4) PRYDA NAIL PLATE MUST BE LOCATED IN SHELTERED NON-CORROSIVE POSITIONS ONLY.
5) PRYDA NAIL PLATES MUST NOT BE EXPOSED TO SALT WATER.
6) PRYDA NAIL PLATES TO BE FIXED ON BOTH SIDES OF TRUSS.

Pacifika Building Designz
BUILDING DESIGNS & 3D WORKS / STRUCTURAL CONSULTATION / BUILDING SERVICES / PROJECT MANAGEMENT
Phone (679) 8315279
Email colin.lani@yahoo.com
Office Suva & Savusavu

GENERAL NOTES:
1. COPYRIGHT in all drawings, specifications and other documents and in the work executed from them remains the property of PACIFIKA BUILDING DESIGNZ
2. DIMENSIONS Confirm all dimensions and profiles with Architectural drawings. Do not scale the drawings. If unsure about anything please ask the Architect for clarification.

CLIENT: IOM UN MIGRATION, KOICA, National Disaster Management Office

SHEET TITLE: ROOF DETAIL

PROJECT: ROKOVUAKA MULTIPURPOSE EVACUATION CENTRE

SCALE AS SHOWN	DRAWN BY Colin A
DATE 01.10.2023	PROJECT NO 0273-23
SHEET NO DWG-S09	REVISION NO REV-NO
DECIPLINE STRUCTURAL	

ALL MEASUREMENTS IN MILLIMETERS. R-RESIDENTIAL, C-COMMERCIAL, I-INDUSTRIAL, M-MECHANICAL

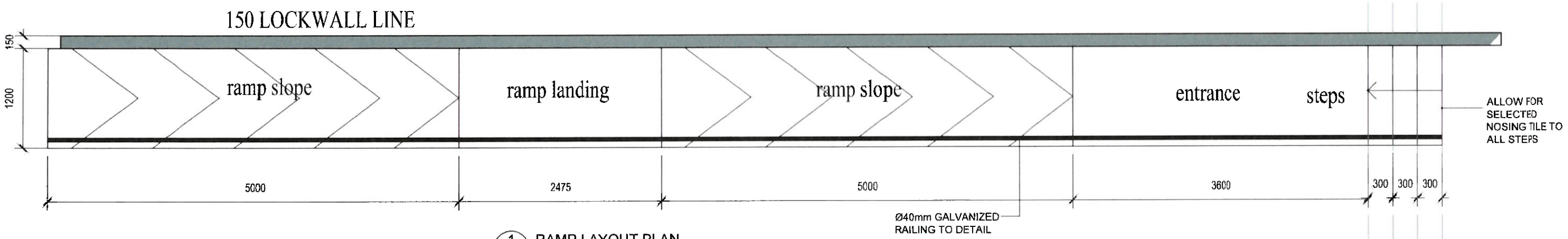

1 RAMP LAYOUT PLAN

SCALE 1:50

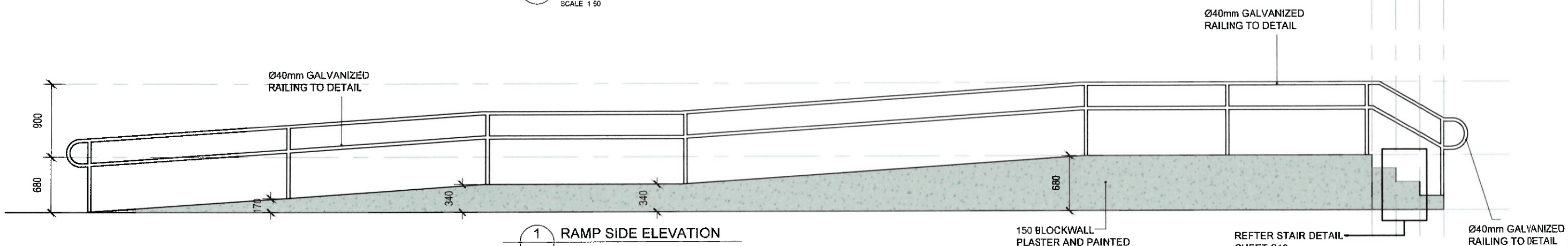

1 RAMP SIDE ELEVATION

SCALE 1:50

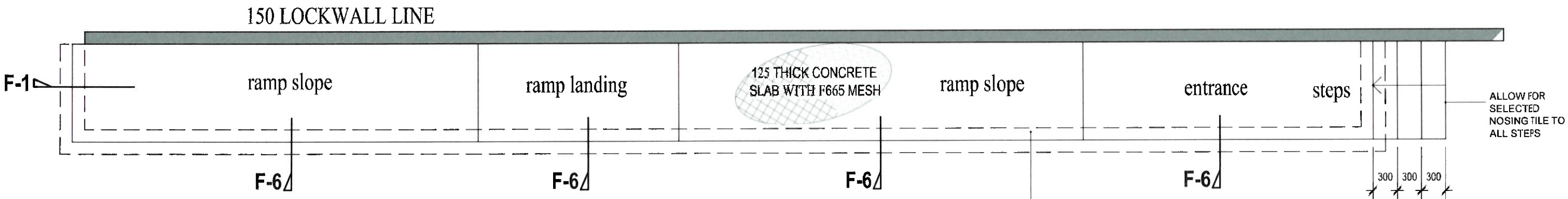

1 RAMP FOUNDATION PLAN

SCALE 1:50

Structures Checked for Safety & Soundness by:
Krishneel Sanjay Ram of ISOTECT ENGINEERS (FIJI) PTE LTD
Chartered & Registered Professional Engineer - Civil & Structural & Environment (Fiji, Australia & New Zealand)
B. Tech Civil - India, Dip. in Civil Engg - Fiji CMEngNZ, CPEng IntPEINZ / APEC Engineer, MIEAust CPEng / FIAPEC Engineer IntPE(Aus), MFIE, MASCE, MCSCE, MISCE & GMICE
SIGN: ..... DATE: 19/02/24

ALL MEASUREMENTS IN MILLIMETERS. R - RESIDENTIAL, C - COMMERCIAL, I - INDUSTRIAL, M - MECHANICAL

Pacifika Building Designz
BUILDING DESIGNS & 3D WORKS / STRUCTURAL CONSULTATION / BUILDING SERVICES / PROJECT MANAGEMENT
Phone (679) 8315279
Email colin_lana@yahoo.com
Office Suva & Savusavu

GENERAL NOTES:
1. COPYRIGHT in all drawings, specifications and other documents and in the work executed from them remains the property of PACIFIKA BUILDING DESIGNZ
2. DIMENSIONS Confirm all dimensions and profiles with Architectural drawings. Do not scale the drawings. If unsure about anything please ask the Architect for clarification.

CLIENT: IOM UN MIGRATION, KOICA, National Disaster Management Office

SHEET TITLE: RAMP PLAN , ELEVATION , FOUNDATION

PROJECT: ROKOVUAKA MULTIPURPOSE EVACUATION CENTRE

SCALE: AS SHOWN	DRAWN BY: Colin A
DATE: 01-10-2023	PROJECT NO: 0273-23
SHEET NO: DWG-S10	REVISION NO: REV-NO
DECIPLINE: STRUCTURAL	

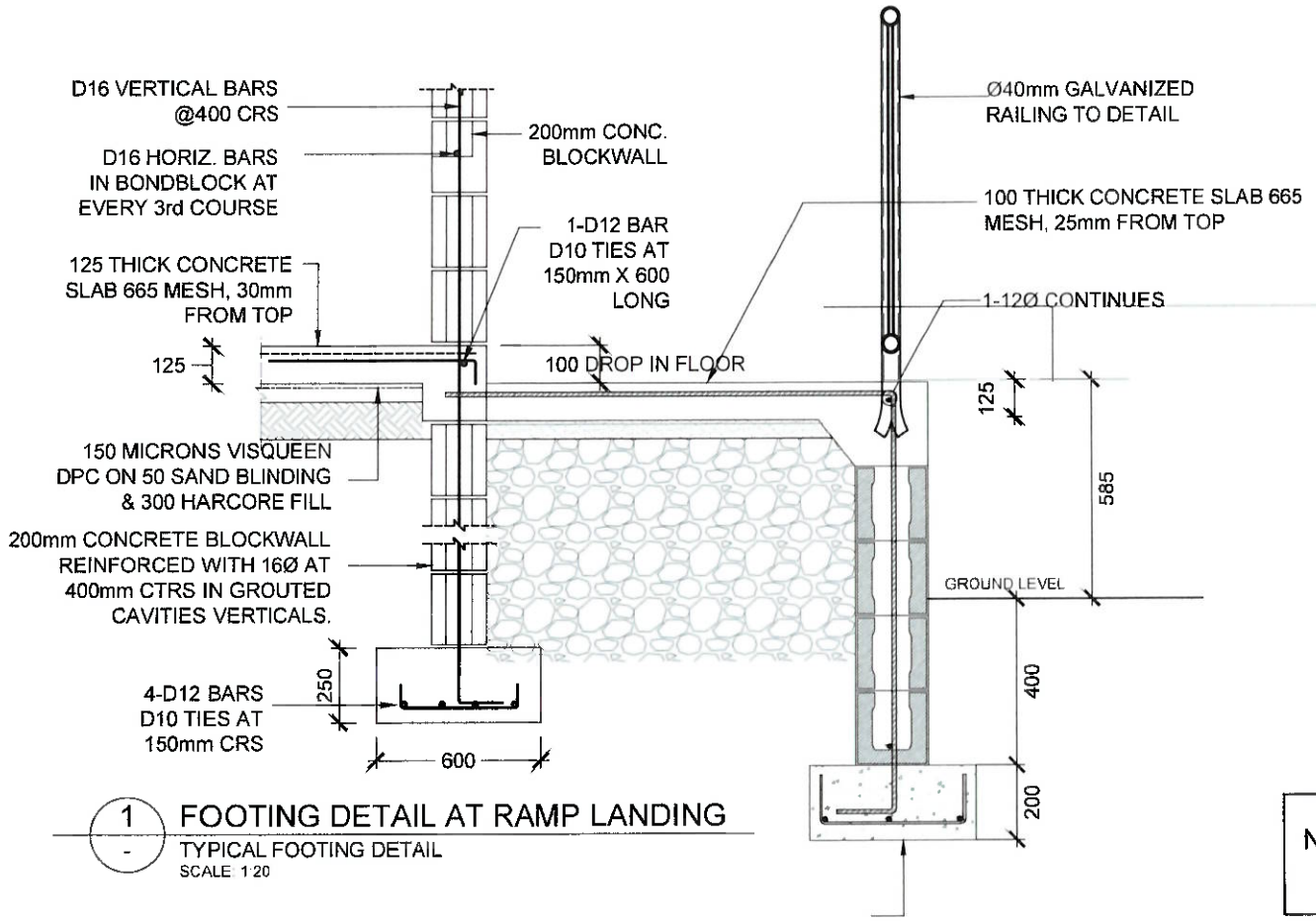

1 - FOOTING DETAIL AT RAMP LANDING
TYPICAL FOOTING DETAIL
SCALE 1:20

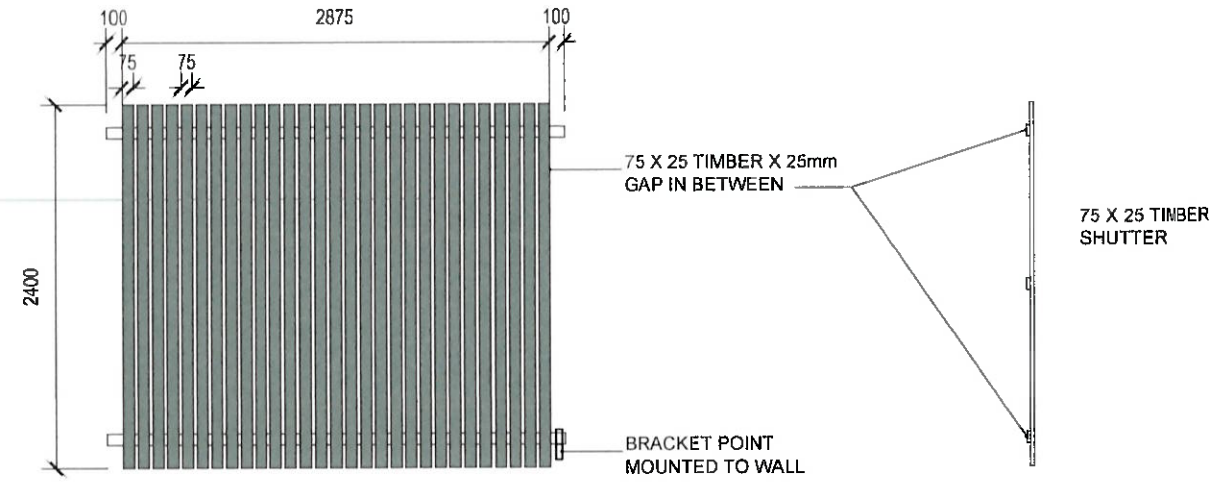

1 - WINDOW SHUTTER
SCALE 1:50

NOTE :CONTRACTOR TO MEASURE ALL WINDOW SITE BEFORE SHUTTER CONSTRUCTION

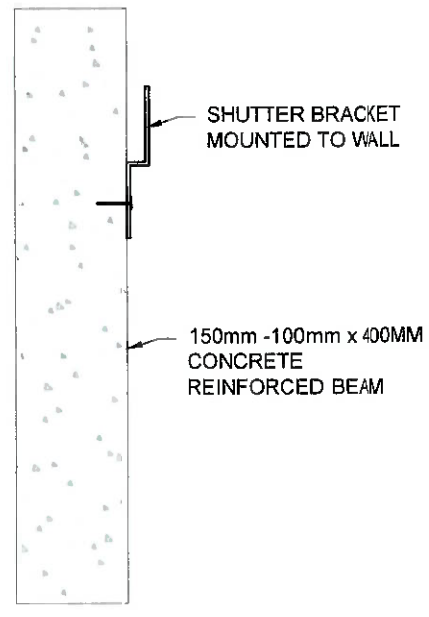

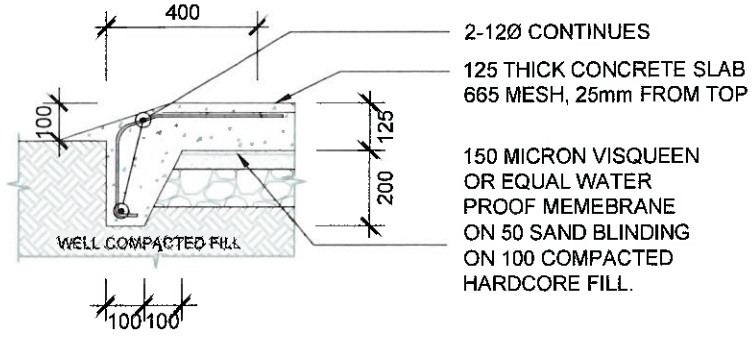

1 - STRIP FOOTING - SF-1
TYPICAL FOOTING DETAIL
SCALE 1:20

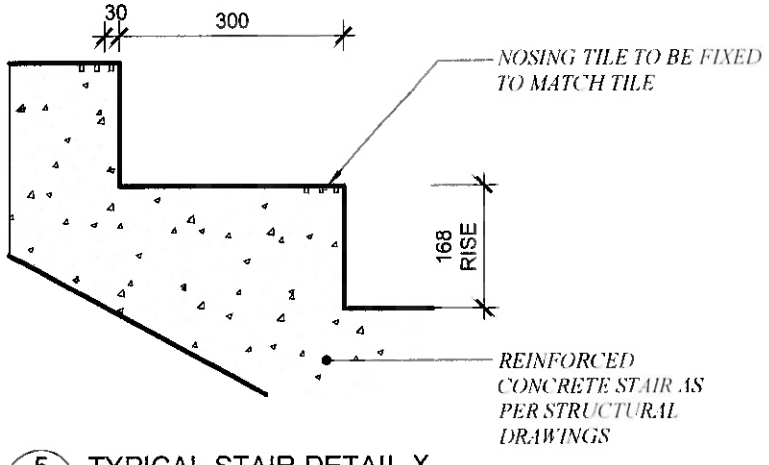

5 - TYPICAL STAIR DETAIL X
SCALE 1:10

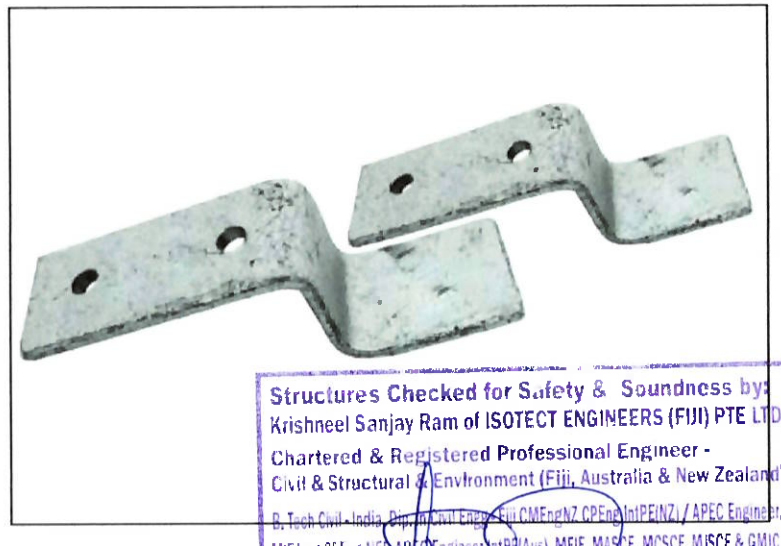

Structures Checked for Safety & Soundness by:
Krishneel Sanjay Ram of ISOTECT ENGINEERS (FIJI) PTE LTD
Chartered & Registered Professional Engineer -
Civil & Structural & Environment (Fiji, Australia & New Zealand)
B. Tech Civil - India, Dip. in Civil Engineering, CMEngNZ, CPEng IntPEINZ / APEC Engineer, MIEAust CPEng NER, APEC Engineer IntPE(Aus), MFIE, MASCE, MCSCE, MUSCE & GMICE
SIGN: ..... DATE: 19/02/24

5 - BRACKET FIXING DETAIL
TYPICAL CROSS SECTION
SCALE 1:10

ALL MEASUREMENTS IN MILLIMETERS. R- RESIDENTIAL, C- COMMERCIAL, I- INDUSTRIAL, M- MECHANICAL

Pacifika Building Designz
BUILDING DESIGNS & 3D WORKS / STRUCTURAL CONSULTATION / BUILDING SERVICES / PROJECT MANAGEMENT
Phone (679) 8315279
Email colin_lana@yahoo.com
Office Suva & Savusavu

GENERAL NOTES:
1. COPYRIGHT in all drawings, specifications and other documents and in the work executed from them remains the property of PACIFIKA BUILDING DESIGNZ
2. DIMENSIONS: Confirm all dimensions and profiles with Architectural drawings. Do not scale the drawings. If unsure about anything please ask the Architect for clarification.

CLIENT: IOM UN MIGRATION, KOICA, National Disaster Management Office

SHEET TITLE: RAMP , SHUTTER AND STAIR DEATIL

PROJECT: ROKOVUAKA MULTIPURPOSE EVACUATION CENTRE

SCALE: AS SHOWN	DRAWN BY: Colin A
DATE: 01-10-2023	PROJECT NO: 0273-23
SHEET NO: DWG-S11	REVISION NO: REV-NO
DECIPLINE: STRUCTURAL	